ಬೃಹತ್ ಬೆಂಗಳೂರು ಮಹಾನಗರ ಪಾಲಿಕೆ

ಟಿಪ್ಪಣಿ ಹಾಳೆ

ವಿಷಯ Repairs to existing Samudaya Bhavana at Basavalingappa Nagara ಪುಟದ ಸಂಖ್ಯೆ -01-

ಕಡತದ ಸಂಖ್ಯೆ

ಪಂಕ್ತಿಯ ಸಂಖ್ಯೆ	ಟಿಪ್ಪಣಿಗಳು ಮತ್ತು ಆಜ್ಞೆಗಳು

ಮಂಡಿಸಿದೆ.

ವಿಷಯ:- Repairs to exisiting Samudaya Bhavana at Basavalingappa Nagara in ward no:03.

*****

1) ಮೇಲ್ಕಂಡ ವಿಷಯಕ್ಕೆ ಸಂಬಂದಿಸಿದಂತೆ, ಬೃಹತ್ ಬೆಂಗಳೂರು ಮಹಾನಗರ ಪಾಲಿಕೆ, ಅಟ್ಟೂರು, ವಾರ್ಡ್ ನಂ–03 ರ ವ್ಯಾಪ್ತಿಯಲ್ಲಿ Repairs to exisiting Samudaya Bhavana at Basavalingappa Nagara in ward no:03 ಕಾಮಗಾರಿಯನ್ನು ನಿರ್ವಹಿಸಲು **2023–24ನೇ ಸಾಲಿನ ಆಯವ್ಯಯ ಲೆಕ್ಕ ಶೀರ್ಷಿಕೆ ಪಿ–3866 SCP/TSP ಯ ಯೋಜನೆಯಡಿಯಲ್ಲಿ** ಸೇರಿಸಿ ಅನುದಾನವನ್ನು ಬಿಡುಗಡೆ ಮಾಡಲಾಗಿರುತ್ತದೆ.

2) ಅದರಂತೆ, ಸ್ಥಳ ಪರಿವೀಕ್ಷಣೆ ಮಾಡಿ ಈ ಮೇಲ್ಕಂಡ ಕಾಮಗಾರಿಯ ಅಂದಾಜು ಪಟ್ಟಿಯನ್ನು CSR of PWD & ELE 2023-24 ರ ಧರಪಟ್ಟಿಯಂತೆ ರೂ.25.00 ಲಕ್ಷಗಳಿಗೆ ತಯಾರಿಸಲಾಗಿದೆ. ಅಂದಾಜು ಪಟ್ಟಿಯಲ್ಲಿ ಅಗತ್ಯಕ್ಕನುಗುಣವಾಗಿ ಈ ಕೆಳಕಂಡ ಅಂಶಗಳನ್ನು ಅಳವಡಿಸಲಾಗಿದೆ.

3)
1. ಕಿಟಕಿ, ಬಾಗಿಲು ಮತ್ತು ಕ್ಲೆರೆಸ್ಟರಿಯನ್ನು ಕಿತ್ತು ಹಾಕುವುದು.
2. ಸಿಮೆಂಟ್ ಅಬ್ಸೆಟರಗಳು ಅಥವಾ ಹಾರ್ಡ್ ಬೋರ್ಡ್‌ಗಳ ಸೀಲಿಂಗ್‌ನ್ನು ಕಿತ್ತುಹಾಕುವುದು.
3. ಆ್ಯಂಗಲ್‌ಗಳಲ್ಲಿ ನಿರ್ಮಿಸಲಾದ ವಿಭಾಗಗಳಲ್ಲಿ ಉಕ್ಕಿನ ಕೆಲಸವನ್ನು ಕಿತ್ತು ಹಾಕುವುದು.
4. ರಸ್ತೆಯ ಭೂಮಿಯನ್ನು ಸ್ವಚ್ಚಗೊಳಿಸುವುದು ಮತ್ತು ಗ್ರಬ್ ಮಾಡುವುದು.
5. ಸಿಮೆಂಟ್ ಕಾಂಕ್ರೀಟ್‌ನ್ನು ಹಾಕುವುದು.
6. ಟಿ.ಎಂ.ಟಿ ಸ್ಟೀಲ್‌ನ್ನು ಅಳವಡಿಸುವುದು.
7. ಸಾಲಿಡ್ ಕಾಂಕ್ರೀಟ್ ಬ್ಲಾಕ್ಸ್‌ನ್ನು ಅಳವಡಿಸುವುದು
8. 20 ಎಂ.ಎಂ.ದಪ್ಪದ ಸಿಮೆಂಟ್ ಪ್ಲಾಸ್ಟರ್‌ನ್ನು ಹಾಕುವುದು
9. ವೈಟ್ ವಾಷ್‌ನ್ನು ಮಾಡುವುದು.
10. ಎಲೆಕ್ಟ್ರಿಕಲ್ ಕೆಲಸವನ್ನು ಮಾಡುವುದು.

ಮೇಲ್ಕಂಡ ಎಲ್ಲಾ ಅಂಶಗಳು ಸದರಿ ಕಾಮಗಾರಿಗೆ ಬಹಳ ಅವಶ್ಯಕವಾಗಿರುತ್ತದೆ. **2023–24ನೇ ಸಾಲಿನ ಆಯವ್ಯಯ ಲೆಕ್ಕ ಶೀರ್ಷಿಕೆ ಪಿ–3866 SCP/TSP ಯ ಯೋಜನೆಯಡಿಯಲ್ಲಿ** ಅಂದಾಜು ಪಟ್ಟಿಯನ್ನು ತಯಾರಿಸಲಾಗಿದೆ. ಕೆಲಸವನ್ನು ತುರ್ತಾಗಿ ತೆಗೆದು ಕೊಳ್ಳಬೇಕಾಗಿರುವುದರಿಂದ ಕಾಮಗಾರಿಯ ಸಂಕೇತ:_____ ಆಡಳಿತಾತ್ಮಕ ಅನುಮೋದನೆ ಹಾಗೂ ತಾಂತ್ರಿಕ ಮಂಜೂರಾತಿ ಕೋರಿ ಕಡತವನ್ನು ತಮ್ಮ ಮುಂದಿನ ಆದೇಶಕ್ಕೆ ಮಂಡಿಸಿದೆ.

4)

ಸ.ಅ (ವಾರ್ಡ್–ನಂ:03)

ಸಹಾಯಕ ಕಾರ್ಯಪಾಲಕ ಅಭಿಯಂತರರು
ಯಲಹಂಕ ಉಪನಗರ ಉಪವಿಭಾಗ.

5) Executive Engineer (YNR)V

ಪು.ತಿ.ನೋ

ವಿಷಯ Repairs to Existing samudaya bhavana at Basavalingappa nagara in ward no-03

ಕಂಡಿಕೆ ಸಂಖ್ಯೆ	ಸಂ ಚ

ಕಂಡಿಕೆ (4)ರಲ್ಲಿ ಸಹಾಯಕ ಕಾರ್ಯಪಾಲಕ ಅಭಿಯಂತರರು ಯಲಹಂಕ ಉಪನಗರ ಉಪ ವಿಭಾಗರವರು ಸಲ್ಲಿಸಿರುವ ಪ್ರಸ್ತಾವನೆಯಂತೆ 2023-24ನೇ ಸಾಲಿನ ಆಯವ್ಯಯದ ಲೆಕ್ಕಶೀರ್ಷಿಕೆ ಪಿ-1878ರಡಿಯಲ್ಲಿ ಯಲಹಂಕ ವಿಧಾನ ಸಭಾ ಕ್ಷೇತ್ರ ವ್ಯಾಪ್ತಿಯಲ್ಲಿ ಪರಿಶಿಷ್ಟ ಜಾತಿ/ ಪರಿಶಿಷ್ಟ ಪಂಗಡದ ಜನಾಂಗದವರು ವಾಸಿಸುವ ಪ್ರದೇಶಗಳನ್ನು ಅಭಿವೃದ್ಧಿಪಡಿಸಲು ಮಂಜೂರಾಗಿರುವ Repairs to Existing samudaya bhavana at Basavalingappa nagara in ward no-03 ಎಂಬ ಕಾಮಗಾರಿಯನ್ನು ಕೈಗೊಳ್ಳಲು ಲೋಕೋಪಯೋಗಿ ಇಲಾಖೆಯ 2023-24ನೇ ಸಾಲಿನಲ್ಲಿ ಮಂಜೂರಾಗಿರುವ ದರಪಟ್ಟಿಯಂತೆ ರೂ.25.00 ಲಕ್ಷಗಳಿಗೆ ಅಂದಾಜು ಪಟ್ಟಿಯನ್ನು ತಯಾರಿಸಿ ಸಲ್ಲಿಸಿರುತ್ತಾರೆ. ಸದರಿ ಅಂದಾಜು ಪಟ್ಟಿಗೆ ಮಾನ್ಯ ಆಯುಕ್ತರವರು ಅಧಿಕಾರ ಪ್ರತ್ಯಾಯೋಜಿಸಿ ಹೊರಡಿಸಿರುವ ಆದೇಶ ಸಂಖ್ಯೆ ಬಿ 12(1) / ಪಿ.ಆರ್/ 394/2023-24 ದಿನಾಂಕ: 6-12-2023 ರಂದು ನೀಡಿರುವ ಅಧಿಕಾರದನ್ವಯ ಸದರಿ ಕಾಮಗಾರಿಗೆ ಆಡಳಿತಾತ್ಮಕ ಅನುಮೋದನೆ, ತಾಂತ್ರಿಕ ಮಂಜೂರಾತಿ ಹಾಗೂ ಡಿ.ಟಿ.ಎಸ್. ಅನುಮೋದನೆ ನೀಡಲು ತಮ್ಮ ಮುಂದಿನ ಆದೇಶ ಕೋರಿ ಮಂಡಿಸಿದೆ.

12/02/2024

ಕಾರ್ಯಪಾಲಕ ಅಭಿಯಂತರರು
ಯಲಹಂಕ ವಿಭಾಗ.

(6) ಮುಖ್ಯ ಅಭಿಯಂತರರು (ಯ.ವ)

ಕಂಡಿಕೆ (1) ರಿಂದ (5) ರಲ್ಲಿ ವಿವರಿಸಿರುವಂತೆ ಸದರಿ ಕಾಮಗಾರಿಯನ್ನು ಪ್ರಾರಂಭದಿಂದ ಪೂರ್ಣಗೊಳ್ಳುವವರೆಗೆ ಪ್ರಮುಖರನ್ನು ನೇಮಕ ಮಾಡಲು ಹಾಗೂ ಕೆಳಕಂಡ ತಮ್ಮ ಮುಂದಿನ ಆದೇಶಕ್ಕೆ ಕೆಳಗೆ ಸಲ್ಲಿಸಿದೆ

ಮುಖ್ಯ ಅಭಿಯಂತರರು
ಯಲಹಂಕ ವಲಯ
ಬೃಹತ್ ಬೆಂಗಳೂರು ಮಹಾನಗರ ಪಾಲಿಕೆ

(7) ವಲಯ ಆಯುಕ್ತರು (ಯ.ವ)

12/2/24

(8) EE (Yelahanka)

ಬೃಹತ್ ಬೆಂಗಳೂರು ಮಹಾನಗರ ಪಾಲಿಕೆ

ಟಿಪ್ಪಣಿ ಹಾಳೆ

ವಿಷಯ Repairs to Existing Samudhaya Bhavana at Basavalingappa Nagara ಪುಟದ ಸಂಖ್ಯೆ 03

ಕಡತದ ಸಂಖ್ಯೆ

ಕಂಡಿಕೆ ಸಂಖ್ಯೆ	ಟಿಪ್ಪಣಿಗಳು ಮತ್ತು ಆಜ್ಞೆಗಳು

ಸಾ ಯ-03

ಕಂಡಿಕೆ ( ) ರಲ್ಲಿ ಸಹಾಯಕ ಕಾರ್ಯಪಾಲಕ ಅಭಿಯಂತರರು ಯಲಹಂಕ ಉಪನಗರ ಉಪವಿಭಾಗರವರು ಮಾಡಿರುವ ಪ್ರಸ್ತಾವನೆಯಂತೆ 2023-24ನೇ ಸಾಲಿನ ಆಯವ್ಯಯದ ಲೆಕ್ಕಶೀರ್ಷಿಕೆ ಪಿ-1878 ಪರಿಶಿಷ್ಟ ಜಾತಿ/ ಪರಿಶಿಷ್ಟ ಪಂಗಡದ ಯೋಜನೆಯಡಿಯಲ್ಲಿ ಮೀಸಲಿಟ್ಟಿರುವ ಅನುದಾನದಡಿಯಲ್ಲಿ ಮಂಜೂರಾಗಿರುವ Repairs to exisiting Samudaya Bhavana at Basavalingappa Nagara in ward no:03 ಎಂಬ ಕಾಮಗಾರಿಯನ್ನು ಕೈಗೊಳ್ಳಲು 2021-22ನೇ ಸಾಲಿನ ಲೋಕೋಪಯೋಗಿ ಇಲಾಖೆಯ ಎಸ್.ಆರ್. ದರಪಟ್ಟಿ, Bangalore Circle for Year 2023-2024ರಲ್ಲಿ ಮಂಜೂರಾಗಿರುವ ದರಪಟ್ಟಿ ಅನುಸರಿಸಿ ರೂ.25.00ಲಕ್ಷಗಳಿಗೆ ಅಂದಾಜುಪಟ್ಟಿಯನ್ನು ತಯಾರಿಸಲಾಗಿದ್ದು, ಸದರಿ ಅಂದಾಜು ಪಟ್ಟಿಗೆ ಮಾನ್ಯ ಆಯುಕ್ತರವರು ಅಧಿಕಾರ ಪ್ರತ್ಯಾಯೋಜಿಸಿ ಹೊರಡಿಸಿರುವ ಆದೇಶ ಸಂಖ್ಯೆ :ಬಿ12(1) ಪಿ.ಆರ್/394/2023-24 ದಿನಾಂಕ: 06-12-2023 ರಂತೆ ನೀಡಿರುವ ಅಧಿಕಾರದನ್ವಯ ವಲಯ ಆಯುಕ್ತರು (ಯಲಹಂಕ)ರವರು ಕಂಡಿಕೆ(07)ರಲ್ಲಿ ಆಡಳಿತಾತ್ಮಕ ಅನುಮೋದನೆ ನೀಡಿರುತ್ತಾರೆ. ಅದರಂತೆ ಆಡಳಿತಾತ್ಮಕ ಅನುಮೋದನೆ ಟಿಪ್ಪಣಿಗೆ ಸಹಿ ಮಾಡಿದೆ. ಹಾಗೂ ಸದರಿ ಕಾಮಗಾರಿಗೆ ಟೆಂಡರ್ ಆಹ್ವಾನಿಸಬೇಕಾಗಿರುವುದರಿಂದ ತಾಂತ್ರಿಕ ಮಂಜೂರಾತಿ ಹಾಗೂ ಡಿ.ಟಿ.ಎಸ್. ಅನುಮೋದನೆ ನೀಡಲು ತಮ್ಮ ಮುಂದಿನ ಆದೇಶ ಕೋರಿ ಸಲ್ಲಿಸಿದೆ.

12/2/24

ಕಾರ್ಯಪಾಲಕ ಅಭಿಯಂತರರು
ಯಲಹಂಕ ವಿಭಾಗ

(9) ಮುಖ್ಯ ಅಭಿಯಂತರರು (ಯಲಹಂಕ ವಲಯ)

ಕಾರ್ಯಪಾಲಕ ಅಭಿಯಂತರರು ಯಲಹಂಕ ವಿಭಾಗರವರ ವರದಿಯನ್ನು ತಮ್ಮ ಅವಗಾಹನೆಗೆ ತರುತ್ತಾ, ವಾರ್ಡ್ ಸಂಖ್ಯೆ:03ರ ವ್ಯಾಪ್ತಿಯಲ್ಲಿ Repairs to existing Samudhaya Bhavana at Basavalingappa Nagara in ward no-03 ಕಾಮಗಾರಿಯನ್ನು 2023-24ನೇ ಸಾಲಿನ ಪಾಲಿಕೆಯ ಆಯವ್ಯಯದಡಿಯಲ್ಲಿ ರೂ25.00ಲಕ್ಷಗಳಿಗೆ ಅನುದಾನ ಮಂಜೂರಾಗಿದ್ದು, ಕ್ರಿಯಾಯೋಜನೆಗೆ ಮಾನ್ಯ ಆಡಳಿತಗಾರರ ಅನುಮೋದನೆ ಪಡೆದು ಲೋಕೋಪಯೋಗಿ ಇಲಾಖೆಯ 2023-24ನೇ ಸಾಲಿನ ದರಪಟ್ಟಿಯಂತೆ ಅಂದಾಜುಪಟ್ಟಿ ತಯಾರಿಸಿ ಆಡಳಿತಾತ್ಮಕ ಅನುಮೋದನೆಗೆ (10) ದೊರೆತಿದ್ದು, ಮಾನ್ಯ ಮುಖ್ಯ ಆಯುಕ್ತರ ಕಛೇರಿ ಆದೇಶ ಸಂಖ್ಯೆ:ಬಿ12(1)ಪಿಆರ್/394/2023-24, ದಿನಾಂಕ:06-12-2023ರಂತೆ ಅಂದಾಜುಪಟ್ಟಿಗೆ ತಾಂತ್ರಿಕ ಮಂಜೂರಾತಿ ಮತ್ತು ಡಿಟಿಎಸ್ ಅನುಮೋದನೆ ಕೋರಿ ಕಡತವನ್ನು ತಮ್ಮ ಮುಂದಿನ ಆದೇಶಕ್ಕಾಗಿ ಸಲ್ಲಿಸಿದೆ.

12/2/24

(11) ಮುಖ್ಯ ಅಭಿಯಂತರರು (ಯ.ವ)

ಮುಖ್ಯ ಅಭಿಯಂತರರು
ಯಲಹಂಕ ವಲಯ
ಬೃಹತ್ ಬೆಂಗಳೂರು ಮಹಾನಗರ ಪಾಲಿಕೆ

ಪು.ತಿ.ನೋ

ವಿಷಯ : Repairs to Existing Samudaya Bhavana at Basavalingappa Nagara in ward No 03

ಪುಟದ ಸಂಖ್ಯೆ ..... -04-

ಕಡತದ ಸಂಖ್ಯೆ .....

ಕಂಡಿಕೆ ಸಂಖ್ಯೆ	ಟಿಪ್ಪಣಿಗಳು ಮತ್ತು ಆಜ್ಞೆಗಳು

ಮಂಡಿಸಿದೆ.

ವಿಷಯ:– Repairs to Existing Samudaya Bhavana at Basavalingappa Nagar in Ward no 03 ಎಂಬ ಕಾಮಗಾರಿಯ ಟೆಂಡರ್ ಮೌಲ್ಯಮಾಪನದ ಬಗ್ಗೆ.

ಉಲ್ಲೇಖ:

1. ಕಾಮಗಾರಿ ಟೆಂಡರ್ ಪ್ರಕಟಣೆ ಸಂಖ್ಯೆ: BBMP/EE/YNK.D/ E-PMT/12/2023-24 dated:13-02-2024.

* * * * *

12 – ಮೇಲ್ಕಂಡ ವಿಷಯಕ್ಕೆ ಸಂಬಂದಿಸಿದಂತೆ, ಬೃಹತ್ ಬೆಂಗಳೂರು ಮಹಾನಗರ ಪಾಲಿಕೆ ವ್ಯಾಪ್ತಿಯ ಪ್ರದೇಶಗಳಲ್ಲಿ ಮೂಲಭೂತ ಸೌಕಾರ್ಯಗಳ ಅಭಿವೃದ್ಧಿಗಾಗಿ 2023–24ನೇ ಸಾಲಿನ ಲೆಕ್ಕಶೀರ್ಷಿಕೆ ಪಿ.1878 ಪರಿಶಿಷ್ಟ ಜಾತಿ/ ಪರಿಶಿಷ್ಟ ಪಂಗಡದ ವಿವೇಚನೆಗೆ ಒಳಪಟ್ಟ ಅನುದಾನದಡಿಯಲ್ಲಿ ವಾರ್ಡ್‌ನಂ–03ರ ವ್ಯಾಪ್ತಿಯಲ್ಲಿ ಬಸವಲಿಂಗಪ್ಪನರದಲ್ಲಿ ಸಮುದಾಯಭವನ ದುರಸ್ಥಿ ಕಾಮಗಾರಿಯ ವಿವರ ಈ ಕೆಳಕಂಡಂತಿದೆ.

Sl No	Name of work	Estimate cost Rs in Lakhs
01	Repairs to Existing Samudaya Bhavana at Basavalingappa Nagar in Ward no 03	25.00
	Total	25.00

– 13 – ಈ ಮೇಲ್ಕಂಡ ಕಾಮಗಾರಿಗೆ ಮಾನ್ಯ ಮುಖ್ಯ ಅಭಿಯಂತರರು ಯಲಹಂಕ ವಲಯರವರಿಂದ ಅನುಮೊದನೆ ಪಡೆಯಲಾಗಿರುತ್ತದೆ. ಸದರಿ ಕಾಮಗಾರಿಗೆ 2023–24ನೇ ಸಾಲಿನ ಲೋಕೋಪಯೋಗಿ ಇಲಾಖೆ ದರಪಟ್ಟಿಯ ದರಗಳನ್ನು ಅನುಸರಿಸಿ ರೂ.25.00 ಲಕ್ಷಗಳಿಗೆ ಅಂದಾಜು ಪಟ್ಟಿಯನ್ನು ತಯಾರಿಸಿದ್ದು, ವಲಯ ಆಯುಕ್ತರು, ಯಲಹಂಕ ವಲಯರವರು ಆಡಳಿತಾತ್ಮಕ ಅನುಮೋದನೆ ನೀಡಿರುತ್ತಾರೆ. ಹಾಗೂ ಮುಖ್ಯ ಅಭಿಯಂತರರು, ಯಲಹಂಕ ವಲಯರವರು ತಾಂತ್ರಿಕ ಮಂಜೂರಾತಿ ಸಂಖ್ಯೆ ಬೃ.ಬೆಂ.ಮ.ಪಾ/ಮು.ಅ/ತಾ.ಮಂ/ಯ.ವ./ಪಿ.ಆರ್/2023–24 ದಿನಾಂಕ:12–02–2024 ರಂತೆ ತಾಂತ್ರಿಕ ಮಂಜೂರಾತಿಯನ್ನು ಮತ್ತು ಕರಡು ಟೆಂಡರ್ ಶೆಡ್ಯೂಲ್ – ಬಿ ಗೆ ಅನುಮೋದನೆ ನೀಡಿರುತ್ತಾರೆ.

– 14 – ಈ ಮೇಲ್ಕಂಡ ಕಾಮಗಾರಿಗೆ ಸಂಬಂದಿಸಿದಂತೆ ಉಲ್ಲೇಖ (1) ರಂತೆ ದಿನಾಂಕ: 13–02–2024 ರಂದು KTPP.Act and KW-2 Standard Tender Document ಅನುಸಾರ Karnataka Public procurement portal ಮುಖಾಂತರ ಟೆಂಡರ್ ಕರೆದಿದ್ದು, ಸದರಿ ಟೆಂಡರ್ ಪ್ರಕಟಣೆಯನ್ನು ಸಾರ್ವಜನಿಕ ಸಂಪರ್ಕಾಧಿಕಾರಿಗಳ ಮುಖಾಂತರ ವಿಜಯ ಕರ್ನಾಟಕ ಹಾಗೂ ದಿ ಟೈಮ್ಸ್ ಆಫ್ ಇಂಡಿಯಾ ದಿನಪತ್ರಿಕೆಯಲ್ಲಿ ದಿ:14–02–2024 ರಂದು ಪ್ರಕಟಿಸಲಾಗಿರುತ್ತದೆ.

ಸದರಿ ಟೆಂಡರ್‌ನ ವಿವರಗಳು ಈ ಕೆಳಕಂಡತಿರುತ್ತದೆ.

ಕ್ರ.ಸಂ	ಅಂಶಗಳು	ವಿವರಗಳು
1	ಕೆಲಸದ ಹೆಸರು	Repairs to Existing Samudaya Bhavana at Basavalingappa Nagar in Ward no 03
2	ಅಂದಾಜು ಮೊತ್ತ	ರೂ. 25.00 ಲಕ್ಷಗಳು
3	ಇಂಡೆಂಟ್ ನಂ	**BBMP/2023-24/OW/WORK_INDENT2337**

ಬೃಹತ್ ಬೆಂಗಳೂರು ಮಹಾನಗರ ಪಾಲಿಕೆ

ಟಿಪ್ಪಣಿ ಹಾಳೆ

ವಿಷಯ Repairs to Existing Sanitary ..... ಪುಟದ ಸಂಖ್ಯೆ .....05.....

Bhavani & Ramanjaneyappa Nagaraj Lay ..... ಕಡತದ ಸಂಖ್ಯೆ .....

ಕಂಡಿಕೆ ಸಂಖ್ಯೆ	ಟಿಪ್ಪಣಿಗಳು ಮತ್ತು ಆಜ್ಞೆಗಳು

4	ಅನುದಾನದ ಯೋಜನೆ ಹೆಸರು	2023–24 ನೇ ಸಾಲಿನ ಪರಿಶಿಷ್ಟ ಜಾತಿ/ ಪರಿಶಿಷ್ಟ ಪಂಗಡದ ಅನುದಾನ
5	ಲೆಕ್ಕಶೀರ್ಷಿಕೆ	ಪಿ–1878
6	ಅಡಳಿತಾತ್ಮಕ ಅನುಮೋದನೆ	ವಲಯ ಆಯುಕ್ತರು, ಯಲಹಂಕ ವಲಯ, ಬಿಬಿಎಂಪಿ ರವರಿಂದ ಪಡೆಯಲಾಗಿದೆ.
7	ತಾಂತ್ರಿಕ ಮಂಜೂರಾತಿ ಮೊತ್ತ	ರೂ.25.00 ಲಕ್ಷಗಳು
8	ತಾಂತ್ರಿಕ ಮಂಜೂರಾತಿ ಸಂಖ್ಯೆ	ಸಂಖ್ಯೆ.ಬೃ.ಬೆಂ.ಮ.ಪಾ/ಮು.ಅ/ಯವ/ತಾ.ಮಂ/103/ 2023–24 ದಿನಾಂಕ:12–02–2024 ರಂತೆ
9	ಟೆಂಡರ್‌ಗೆ ಇಟ್ಟ ಮೊತ್ತ	ರೂ. 21.12 ಲಕ್ಷಗಳು
10	ಅನ್ ಲೈನ್ Karnataka Public procurement portal ಮುಖಾಂತರ ಟೆಂಡರ್ ಸಲ್ಲಿಸಲು ಕೊನೆಯ ದಿನಾಂಕ	23-02-2024 upto 16.00 hrs
11	ಅನ್ ಲೈನ್ Karnataka Public procurement portal ಮುಖಾಂತರ ಟೆಂಡರ್ ತೆರೆಯುವ ದಿನಾಂಕ	26-02-2024 after 16.00 hrs

-15- ಮೇಲ್ಕಂಡ ಟೆಂಡರ್ ಪ್ರಕಟಣೆಗೆ ಸಂಬಂದಿಸಿದಂತೆ ದಿನಾಂಕ:26–02–2024 ರಂದು ಟೆಂಡರ್‌ಅನ್ನು ತೆರೆಯಲಾಗಿದ್ದು, ಸದರಿ ಟೆಂಡರ್‌ನಲ್ಲಿ ಒಬ್ಬರೇ ಗುತ್ತಿಗೆದಾರರು ಭಾಗವಹಿಸಿದ್ದು, ಗುತ್ತಿಗೆದಾರರ ವಿವರಗಳು ಈ ಕೆಳಕಂಡಂತಿರುತ್ತದೆ.

1. Sri. PRASHANTH M(MARADIS ENTERPRISES)

-16- ಮೇಲ್ಕಂಡ ಗುತ್ತಿಗೆದಾರರು Karnataka Public procurement portalನಲ್ಲಿ ಭಾಗವಹಿಸಿದ್ದು, Sri. PRASHANTH M(MARADIS ENTERPRISES) ರವರ ದಾಖಲಾತಿಗಳನ್ನು ಪರಿಶೀಲಿಸಲಾಗಿ ಗುತ್ತಿಗೆದಾರರು ಕಾಮಗಾರಿ ದೃಢೀಕರಣ ಪತ್ರ, ಬ್ಯಾಂಕ್ ಗ್ಯಾರಂಟಿ, ಟರ್ನ್‌ಓವರ್ ಸರ್ಟಿಫೀಕೇಟ್ ಹಾಗೂ ಇತರೆ ಅವಶ್ಯಕವಾಗಿರುವ ಎಲ್ಲಾ ದಾಖಲಾತಿಗಳನ್ನು ಸಂಬಂಧಪಟ್ಟ ಕಛೇರಿಗಳಿಂದ ದೃಢೀಕರಿಸಿಕೊಳ್ಳಲಾಗಿದೆ. 'KW-2 Standard Tender Document ಅನುಸಾರ ನಿಗದಿಪಡಿಸಿರುವ ಎಲ್ಲಾ ಷರತ್ತುಗಳಂತೆ ತಾಂತ್ರಿಕ ಮೌಲ್ಯ ಮಾಪನದಲ್ಲಿ ಅರ್ಹತೆ ಹೊಂದಿರುತ್ತಾರೆ. ತಾಂತ್ರಿಕ ಮೌಲ್ಯಮಾಪನದ ವಿವರಗಳು ಮತ್ತು ತುಲನಾತ್ಮಕ ಪಟ್ಟಿಯನ್ನು ಕಡತದಲ್ಲಿ ಲಗತ್ತಿಸಿದೆ.

-17- ಮೇಲಿನ ವಿವರಗಳನ್ನು ತಮ್ಮ ಅವಗಾಹನೆಗೆ ತರುತ್ತಾ ಸದರಿ ಟೆಂಡರ್ ಪ್ರಕ್ರಿಯೆಯಲ್ಲಿ ಭಾಗವಹಿಸಿ ತಾಂತ್ರಿಕ ಮೌಲ್ಯಮಾಪನದಲ್ಲಿ ಅರ್ಹತೆ ಹೊಂದಿರುವ ಬಿಡ್‌ದಾರರಾದ Sri. PRASHANTH M(MARADIS ENTERPRISES) ರವರ ತಾಂತ್ರಿಕ ಬಿಡ್‌ನ್ನು ಅನುಮೋದಿಸಲು ಕೋರಿ ಕಡತವನ್ನು ತಮ್ಮ ಮುಂದಿನ ಆದೇಶಕ್ಕಾಗಿ ಮಂಡಿಸಿದೆ.

24/02/2024

ಕಾರ್ಯಪಾಲಕ ಅಭಿಯಂತರರು
ಯಲಹಂಕ ವಿಭಾಗ

ವಿಷಯ : Repair to Existing Samudaya Bhavana at Basavalingeshwara Nagara in Ward No-03.

ಪುಟದ ಸಂಖ್ಯೆ ..... 06 .....

ಕಡತದ ಸಂಖ್ಯೆ .....

ಕಂಡಿಕೆ ಸಂಖ್ಯೆ	ಟಿಪ್ಪಣಿಗಳು ಮತ್ತು ಆಜ್ಞೆಗಳು
-18-	ಮುಖ್ಯ ಅಭಿಯಂತರರು (ಯಲಹಂಕ ವಲಯ) ನಿಲ್ಲಲ್ಲಿ ಪತ್ರವನ್ನು ಕಳುಹಿಸಿಕೊಡಿ. ಮುಖ್ಯ ಅಭಿಯಂತರರು ಯಲಹಂಕ ವಲಯ ಬೃಹತ್ ಬೆಂಗಳೂರು ಮಹಾನಗರ ಪಾಲಿಕೆ
-19-	ಕಾ.ಪಾ.ಅ[ಯ.ವಿ]

ಯಲಹಂಕ ವಿಭಾಗದ ವ್ಯಾಪ್ತಿಯ ಸಂಖ್ಯೆ:03ರಲ್ಲಿ 2023-24ನೇ ಸಾಲಿನ ಲೆಕ್ಕಶೀರ್ಷಿಕೆ ಪಿ.1878 ಪರಿಶಿಷ್ಟ ಜಾತಿ/ ಪರಿಶಿಷ್ಟ ಪಂಗಡದ ಅನುದಾನದಡಿಯಲ್ಲಿ ಸದರಿ ಕಾಮಗಾರಿಯನ್ನು ಕೈಗೊಂಡು ನಿರ್ವಹಿಸಲು ಒಟ್ಟು ಅಂದಾಜು ಮೊತ್ತ ರೂ.25.00 ಲಕ್ಷಗಳಿಗೆ ದಿನಾಂಕ:13-02-2024 ರಂದು ದ್ವಿ-ಲಕೋಟೆ ಪದ್ಧತಿಯಲ್ಲಿ Karnataka Public procurement portal ಮುಖಾಂತರ ಟೆಂಡರ್ ಕರೆಯಲಾಗಿರುತ್ತದೆ.

ಸದರಿ ಟೆಂಡರ್‌ನಲ್ಲಿ ಒಬ್ಬರೇ ಗುತ್ತಿಗೆದಾರರಾದ Sri. PRASHANTH M(MARADIS ENTERPRISES) ರವರು ಭಾಗವಹಿಸಿ ಟೆಂಡರ್‌ನಲ್ಲಿ ನಿಗಧಿಪಡಿಸಿದ ಷರತ್ತುಗಳಂತೆ ಅರ್ಹ ದಾಖಲಾತಿಗಳನ್ನು ಸಲ್ಲಿಸಿರುತ್ತಾರೆ. ಸದರಿ ಗುತ್ತಿಗೆದಾರರು ತಾಂತ್ರಿಕವಾಗಿ ಅರ್ಹತೆ -20- ಹೊಂದಿರುವುದರಿಂದ ಸದರಿಯವರ ತಾಂತ್ರಿಕ ಬಿಡ್‌ಅನ್ನು ಅನುಮೋದಿಸಿ ಆರ್ಥಿಕ ಬಿಡ್‌ಅನ್ನು ತೆರೆಯಲು ಮುಖ್ಯ ಅಭಿಯಂತರರು ಯಲಹಂಕ ವಲಯರವರು ಕಂಡಿಕೆ(18)ರಲ್ಲಿ ಅನುಮೋದನೆ ನೀಡಿರುತ್ತಾರೆ. ಅದರಂತೆ ತಾಂತ್ರಿಕವಾಗಿ ಅರ್ಹರಾಗಿರುವ ಬಿಡ್ದುದಾರರ ಆರ್ಥಿಕ ಬಿಡ್‌ಅನ್ನು ತೆರೆಯಲಾಗಿದ್ದು,

ವಿವರ ಈ ಕೆಳಕಂಡಂತಿರುತ್ತದೆ.

ಕ್ರ. ಸಂ	ಗುತ್ತಿಗೆದಾರರ ಹೆಸರು	ಟೆಂಡರ್ ಗಿಟ್ಟ ಮೊತ್ತ 2023-24ನೇ ಸಾಲಿನ ಅನುಮೋದಿತ ದರಗಳಿಗೆ ಹೊಲಿಸಿದಾಗ.	ಗುತ್ತಿಗೆ ದಾರರು ನಮೂದಿಸಿರುವ ದರಗಳು	2023-24ನೇ ಸಾಲಿನ ಧರಗಳಿಗೆ ಹೋಲಿಸಿದಾಗ ಶೇಕಡ ವಾರು	ಷರಾ
01	PRASHANTH M (MARADIS ENTERPRISES)	2112641.15	2110393.61	(-)0.11% ಕಡಿಮೆ	

-21- ಮೇಲ್ಕಂಡ ಗುತ್ತಿಗೆದಾರರು ಸಲ್ಲಿಸಿರುವ ಆರ್ಥಿಕ ಬಿಡ್‌ಅನ್ನು ಪರಿಶೀಲಿಸಿ Sri PRASHANTH M(MARADIS ENTERPRISES) ರವರು ನಮೂದಿಸಿರುವ **ರೂ.21,10,393.61 ಗಳು** ಅತಿ ಕಡಿಮೆ ದರಗಳಾಗಿರುತ್ತದೆ.

ಬೃಹತ್ ಬೆಂಗಳೂರು ಮಹಾನಗರ ಪಾಲಿಕೆ

ಟಿಪ್ಪಣಿ ಹಾಳೆ

ವಿಷಯ Repairing & Existing Compound ... ಪುಟದ ಸಂಖ್ಯೆ ...07...

Wall at Ramamurthynagar Ward ... ಕಡತದ ಸಂಖ್ಯೆ .....

ಕಂಡಿಕೆ ಸಂಖ್ಯೆ	ಟಿಪ್ಪಣಿಗಳು ಮತ್ತು ಆಜ್ಞೆಗಳು
03	
-22-	ಆದುದರಿಂದ ಗುತ್ತಿಗೆದಾರರಾದ Sri. PRASHANTH M (MARADIS ENTERPRISES) ರವರು ನಮೂದಿಸಿರುವ **ರೂ.21,10,393.61** ಗಳು ಅತಿ ಕಡಿಮೆ ದರಗಳಾಗಿದ್ದು, ಅನುಮೋದಿತ ಅಂದಾಜು ಪಟ್ಟಿಯ 2023-24ನೇ ಸಾಲಿನ ದರಗಳ ದರಪಟ್ಟಿಗೆ ಹೋಲಿಸಿದಾಗ **ಶೇಕಡ (-)0.11%** ರಷ್ಟು ಕಡಿಮೆಯಾಗಿರುತ್ತದೆ. ಆದುದರಿಂದ ಸದರಿ ಟೆಂಡರ್‌ನಲ್ಲಿ ಅರ್ಹ ಗುತ್ತಿಗೆದಾರರಾದ Sri.PRASHANTH M (MARADIS ENTERPRISES) ರವರು ನಮೂದಿಸಿರುವ ದರ **ರೂ.21,10,393.61** ಗಳಿಗೆ ಅನುಮೋದನೆ ನೀಡಲು ಕೊರಿ ಕಡತವನ್ನು ತಮ್ಮ ಮುಂದಿನ ಆದೇಶಕ್ಕಾಗಿ ಮಂಡಿಸಿದೆ. 29/02/2024 ಕಾರ್ಯಪಾಲಕ ಅಭಿಯಂತರರು ಯಲಹಂಕ ವಿಭಾಗ
-23-	ಮುಖ್ಯ ಅಭಿಯಂತರರು (ಯಲಹಂಕ ವಲಯ) ಕಾರ್ಯಪಾಲಕ ಅಭಿಯಂತರರು ಯಲಹಂಕ ವಿಭಾಗರವರು ವರದಿಯಂತೆ ತಾಂತ್ರಿಕವಾಗಿ ಅರ್ಹರಾದ ಒಬ್ಬರು ಬಿಡ್‌ದಾರರು ಆರ್ಥಿಕ ಬಿಡ್‌ಅನ್ನು ತೆರೆಯಲಾಗಿದ್ದು, Sri. Prashanth M (Maradis Enterprises) ಕನಿಷ್ಟ ದರ ನಮೂದಿಸಿದ್ದು, ಮೊತ್ತ ರೂ. 21,10,393.61 (-) 0.11% ರಷ್ಟು ಕಡಿಮೆಯಾಗಿರುತ್ತದೆ. ಸದರಿ ದರಗಳಿಗೆ ಅನುಮೋದನೆ ನೀಡಲು ಕಾರ್ಯಪಾಲಕ ಅಭಿಯಂತರರು ಯಲಹಂಕ ವಿಬಾಗರವರು ಕೋರಿರುವುದರಿಂದ ಟೆಂಡರ್ ಅನುಮೋದನೆಗೆ ತಮ್ಮ ಮುಂದಿನ ಆದೇಶಕ್ಕೆ ಸಲ್ಲಿಸಿದೆ. ತಾರತ್ರಿಕ ಸಹಾಯಕರು
24	
25	ಮುಖ್ಯ ಅಭಿಯಂತರರು (ಯ.ವ) ಮುಖ್ಯ ಅಭಿಯಂತರರು ಯಲಹಂಕ ವಲಯ ಬೃಹತ್ ಬೆಂಗಳೂರು ಮಹಾನಗರ

BRUHAT BANGALORE MAHANAGARA PALIKE

NO:BBMP/EE/YNK.D/EPMT-12/W.O/45 /2023-24

Office of the Executive Engineer,
Yelahanka Division
B.B.M.P. Bangalore-64
Date: 09/03/2024

To,
SRI. PRASHANTH M, (MARADIS ENTERPRISES),
No 767 A sector, Yelahanka NewTown,
Bangalore-560064

WORK ORDER

Sub: "Repairs to Existing Samudaya Bhavana at Basavalingappa Nagar in Ward no 03"

Ref: Your Agreement No: EE/YNK//AG/65 /2023-24 Dated: 07/03/2024

* * * * *

Pursuant to your furnishing the requisite security deposit as stipulated in ITT Clause 24.1 and signing of the contract agreement for the "Repairs to Existing Samudaya Bhavana at Basavalingappa Nagar in Ward no 03" Tender Price of **Rs.21,10,393/-** (Rupees Twenty One lakhs Ten Thousand Three Hundred Ninety Three Only) and 18% GST **Rs.3,79,870/-** (Rupees Three Lakhs Seventy Nine Thousand Eight Hundred Seventy Only) Hence you are hereby instructed to proceed with the execution of the said works in accordance with the contract documents the stipulated time for the completion of the work is 120 days from the date of issuing work order.

07/03/2024

Executive Engineer
Yelahanka Division
Bruhat Bangalore Mahanagara Palike
Bangalore-64

Copy to:-

1. Chief Engineer (Yelahanka Zone) for Kind information
2. Assistant Executive Engineer, Yelahanka satellite Town Sub Division along with Schedule-B for Necessary Action and with instructions to hand over the site and commence the work forthwith and complete with in the stipulated time
3. Copy file.

ವಿಷಯ ..... ಪುಟದ ಸಂಖ್ಯೆ .....

..... ಕಡತದ ಸಂಖ್ಯೆ .....

ಕಂಡಿಕೆ ಸಂಖ್ಯೆ	ಟಿಪ್ಪಣಿಗಳು ಮತ್ತು ಆಜ್ಞೆಗಳು

ಮಂಡಿಸಿದೆ.

ವಿಷಯ:– Repairs to exisiting Samudaya Bhavana at Basavalingappa Nagara in ward no:03 ಎಂಬ ಕಾಮಗಾರಿಗೆ ಇ.ಓ.ಟಿ ಮಂಜೂರಾತಿ ನೀಡುವ ಬಗ್ಗೆ.

ಉಲ್ಲೇಖ:–1) ಕಾಮಗಾರಿ ಆದೇಶ ಸಂ: BBMP/EE/YNK.D/EPMT-12/WO/45/ 2023-24, dt: 9-3-2024.

2) ಕಾಮಗಾರಿ ಸಂಕೇತ: 003-24-000006

3) ಗುತ್ತಿಗೆದಾರರ ಮನವಿ ಪತ್ರದ ದಿ:

*****

ಮೇಲ್ಕಂಡ ವಿಷಯಕ್ಕೆ ಸಂಬಂಧಿಸಿದಂತೆ, ಯಲಹಂಕ ಉಪನಗರ ಉಪವಿಭಾಗದ ವಾರ್ಡ್ ನಂ:04 ರ ವ್ಯಾಪ್ತಿಯಲ್ಲಿ Repairs to exisiting Samudaya Bhavana at Basavalingappa Nagara in ward no:03 ಎಂಬ ಕಾಮಗಾರಿಯು ರೂ.25.00 ಲಕ್ಷಗಳಿಗೆ ಮಂಜೂರಾಗಿದ್ದು, ಸದರಿ ಕಾಮಗಾರಿಯನ್ನು ಉಲ್ಲೇಖದಂತೆ **Sri.PRASHANTH.M (MARADIS ENTERPRISES)** 1ನೇ ದರ್ಜೆ ಗುತ್ತಿಗೆದಾರರಿಗೆ ದಿನಾಂಕ:09–03–2024 ರಂದು ಕಾರ್ಯಾದೇಶವನ್ನು ನೀಡಿರುತ್ತಾರೆ.

ಮುಂದುವರೆದು, ಸದರಿ ಸಮುದಾಯ ಭವನದ ಕಾಮಗಾರಿಯ ಸಮಯಕ್ಕೆ ನಮ್ಮ ಸುಭರ್ಧಿಗೆ ನೀಡಿರುವುದಿಲ್ಲ. ಸಮುದಾಯ ಭವನದ ಕಟ್ಟಡವನ್ನು ದುರಸ್ಥಿ ಮಾಡಲು ~~ಪರಿಷ್ಕರಿಸಿರುವ~~ ಉತ್ತು ಕಟ್ಟಡದ ಡಿಸೈನ್ನು ನಿಗಧಿತ ಡಿಸೈನ್ ಮಾಡಿರುವುದು ವಿಳಂಭವಾಘಗಿರುತ್ತದೆ. ಆದುದರಿಂದ ಕಾರ್ಯಾದೇಶದ ನಿಗಧಿತ ಕಾಮಗಾರಿ ಪೂರ್ಣಗೊಳಿಸಲು ಅವಧಿಯಂತೆ ಕಾಮಗಾರಿಯನ್ನು ಪೂರ್ಣಗೊಳಿಸಲು **ಒಟ್ಟು** 385 ದಿನಗಳ ಕಾಲಾವಧಿ ವಿಸ್ತರಣೆಯನ್ನು ಅನುಮೋದಿಸಿ ಮಂಜೂರು ಮಾಡಲು ಈ ಮೂಲಕ ಕೋರಲಾಗಿದೆ.

120

ಮೇಲ್ಕಂಡ ಕಾಮಗಾರಿಗೆ ~~90~~ ದಿನಗಳು ಕಾಲಾವಕಾಶವನ್ನು ಕಾರ್ಯಾದೇಶದಲ್ಲಿ ನಿಗಧಿಪಡಿಸಲಾಗಿತ್ತು. ಆದರೆ ಸದರಿ ಕಾಮಗಾರಿಯನ್ನು ವಿಳಂಭವಾಗಿ ಪೂರ್ಣಗೊಳಿಸಲಾಗಿರುತ್ತದೆ. ಆದುದರಿಂದ 385 ದಿನಗಳು ಕಾಲಾವಧಿ ವಿಸ್ತರಣೆಯನ್ನು ದಂಡ ವಿಧಿಸಿ/ವಿಧಿಸದೆ ಮಂಜೂರಾತಿ ಕೋರಿ ಕಡತವನ್ನು ಮುಂದಿನ ಆದೇಶಕ್ಕೆ ಮಂಡಿಸಿದೆ.

ಸ.ಅ

ವಾರ್ಡ್ ನಂ:

ಸಹಾಯಕ ಕಾರ್ಯಪಾಲಕ ಅಭಿಯಂತರರು
ಯಲಹಂಕ ಉಪನಗರ ಉಪವಿಭಾಗ,
ಬಿ.ಬಿ.ಎಂ.ಪಿ, ಬೆಂಗಳೂರು–64.

ಪುಟದ ಸಂಖ್ಯೆ .....
ಕಡತದ ಸಂಖ್ಯೆ .....

ಕಂಡಿಕೆ ಸಂಖ್ಯೆ	ಟಿಪ್ಪಣಿಗಳು ಮತ್ತು ಆಜ್ಞೆಗಳು
	ಕಂಡಿಕೆ (1) ರಿಂದ (3) ರಲ್ಲಿ ವಿವರಿಸಿರುವಂತೆ ಸೆಳ್ಳಕರ ಕಿಮ್ಮಗ್ಗಾಯಮ್ಮ (ವಿಧವೆ) ಪತಿಯವರ ಸುಪ್ರೀಂಕೋರ್ಟ್ ಪ್ರಾಂಶುಪಾಲರ ಹುದ್ದೆಯಲ್ಲಿ ಇರುವಾಗ ಮರಣ ಹೊಂದಿರುವುದರಿಂದ ಮತ್ತು ಇವರ ಪತಿಯವರ ಸೇವೆಯು ಕರ್ತವ್ಯದಲ್ಲಿ ಇರುವಾಗ ಮರಣ ಹೊಂದಿರುವುದರಿಂದ ಇವರಿಗೆ ಕುಟುಂಬ ಪಿಂಚಣಿ (family pension) ಮತ್ತು ಇತರೆ ಸೌಲಭ್ಯಗಳನ್ನು ಮಂಜೂರು ಮಾಡಲು ಕೋರಿ ಸಲ್ಲಿಸಿದೆ.
(5)	ಮುಖ್ಯ ಲೆಕ್ಕಾಧಿಕಾರಿಯವರು (ಮು.ಲೆ)

Executive Engineer
Bruhat Bengaluru Mahanagara
Yelahanka Division

CE/MIC-2

ಬೃಹತ್

ವಿಷಯ .....

ಕಂಡಿಕೆ ಸಂಖ್ಯೆ	
	ಕಾರ್ಯಪಾಲಕ
	ವಿಷಯ:– Rep Na
	ಉಲ್ಲೇಖ:– B
	ಮೇಲ್ಕಂಡ
	ಆದೇಶವನ್ನು Sri
1)	ಕಾರ್ಯಪಾಲಕ
	ಗುತ್ತಿಗೆದಾರರು
	ಸಂಬಂಧಿಸಿದಂತೆ 1
	ಗಳಿಗೆ ತಯಾರಿಸಿ
	497120 ರಂ
	ಸಲ್ಲಿಸಿದೆ.
2)	ಸ.ಕಾ.ಅ),
	ಕಂಡಿಕೆ
	(Maradis E
	ಪೂರ್ಣಗೊಳಿಸಿ
	ತಯಾರಿಸಿ
	ಮುಂದಿನ ಆ
3)	ಕಾ.ಅ ಬೃ

ಬೃಹತ್ ಬೆಂಗಳೂರು ಮಹಾನಗರ ಪಾಲಿಕೆ

ಟಿಪ್ಪಣಿ ಹಾಳೆ

YNK-DBR No.....
Date.....

ವಿಷಯ ..... ಪುಟದ ಸಂಖ್ಯೆ .....

..... ಕಡತದ ಸಂಖ್ಯೆ .....

ಕಂಡಿಕೆ ಸಂಖ್ಯೆ	ಟಿಪ್ಪಣಿಗಳು ಮತ್ತು ಆಜ್ಞೆಗಳು

ಕಾರ್ಯಪಾಲಕ ಅಭಿಯಂತರರು, ಯಲಹಂಕ ವಿಭಾಗ ರವರಿಗೆ ಮಂಡಿಸಿದೆ.

ವಿಷಯ:– Repairs to existing Samudaya Bhavana at Basavalingappa Nagara in ward no:03

ಉಲ್ಲೇಖ:– BBMP/EE/YNK.D/EPMT-12/W.O/45/2023-24, dt:9/3/2024

******

ಮೇಲ್ಕಂಡ ವಿಷಯಕ್ಕೆ ಸಂಬಂಧಿಸಿದಂತೆ ಹಾಗೂ ಉಲ್ಲೇಖ (1) ರಂತೆ ಕಾಮಗಾರಿ ಆದೇಶವನ್ನು **Sri.Prashanth.M(Maradis Enterprisess)** ಗುತ್ತಿಗೆದಾರರಿಗೆ ಕಾರ್ಯಪಾಲಕ ಅಭಿಯಂತರರು, ಯಲಹಂಕ ವಿಭಾಗ ರವರು ನೀಡಿರುತ್ತಾರೆ. ಗುತ್ತಿಗೆದಾರರು ಕಾಮಗಾರಿಯನ್ನು ಸಮರ್ಪಕವಾಗಿ ನಿರ್ವಹಿಸಿದ್ದು, ಕಾಮಗಾರಿಗೆ ಸಂಬಂಧಿಸಿದಂತೆ **1st and Final Bill** ಬಿಲ್ಲನ್ನು ರೂ. 94 86 876/- ಗಳಿಗೆ ತಯಾರಿಸಿ ಅಳತೆಗಳನ್ನು ಅಳತೆ ಪುಸ್ತಕ ಸಂಖ್ಯೆ: 4972 **ಮುಟ ಸಂಖ್ಯೆ:** 49720 **ರಿಂದ** 131 ರಲ್ಲಿ ನಮೂದಿಸಿ ಬಿಲ್ ಪಾವತಿಗಾಗಿ ಕಡತವನ್ನು ಸಲ್ಲಿಸಿದೆ.

ಸ.ಕಾ.ಅ),

ಕಂಡಿಕೆ (1) ರಲ್ಲಿ ತಿಳಿಸಿರುವಂತೆ ಗುತ್ತಿಗೆದಾರರಾದ **Sri.Prashanth.M (Maradis Enterprisess)** ಗುತ್ತಿಗೆದಾರರಿಗೆ ಮೇಲಿನ ಕೆಲಸವನ್ನು ಸಮರ್ಪಕವಾಗಿ ಪೂರ್ಣಗೊಳಿಸಿರುತ್ತಾರೆ. ಆದ್ದರಿಂದ ಗುತ್ತಿಗೆದಾರರಿಗೆ **1st and Final Bill** ಬಿಲ್ಲನ್ನು ತಯಾರಿಸಿ **ರೂ.** 94 86 876/- ಗಳನ್ನು ಪಾವತಿಸಲು ಕಡತವನ್ನು ತಮ್ಮ ಮುಂದಿನ ಆದೇಶಕ್ಕೆ ಮಂಡಿಸಿದೆ.

ಸಹಾಯಕ ಕಾರ್ಯಪಾಲಕ ಅಭಿಯಂತರರು
ಯಲಹಂಕ ಉಪನಗರ ಉಪವಿಭಾಗ
ಬ.ಬ.ಎಂ.ಪಿ. ಬೆಂಗಳೂರು-64

27/7/2025

ಕಾ.ಅ (ಯಲಹಂಕ)

ವಿಷಯ :

ಕಂಡಿಕೆ ಸಂಖ್ಯೆ	ಪುಟದ ಸಂಖ್ಯೆ ..... ಕಡತದ ಸಂಖ್ಯೆ ..... ಟಿಪ್ಪಣಿಗಳು ಮತ್ತು ಆಜ್ಞೆಗಳು

ಸದರಿ ಕಾಮಗಾರಿಯನ್ನು ಗುತ್ತಿಗೆದಾರರಾದ (ಮೆ) ಶ್ರೀ ಕೆ.M. ರವರು ನಿರ್ವಹಿಸಿ ಪೂರೈಸಿದ್ದು, ಕಾಮಗಾರಿಯ 1st & Final ಬಿಲ್ಲಿನ

4) ಅಳತೆಗಳನ್ನು ಅಳತೆ ಪುಸ್ತಕ ಸಂಖ್ಯೆ-ಕೆ೧೨೨ ಪುಟ ಸಂಖ್ಯೆ:-ಕೆ೧೨೦ ರಿಂದ ಕೆ೧೨೨ರಲ್ಲಿ ದಾಖಲಿಸಿ ಸಹಾಯಕ ಅಭಿಯಂತರರು, ವಾರ್ಡ್---- ಮತ್ತು ಸಹಾಯಕ ಕಾರ್ಯಪಾಲಕ ಅಭಿಯಂತರರು, ~~ಯಲಹಂಕ ಉಪವಿಭಾಗ~~ / ಯಲಹಂಕ ಉಪನಗರ ಉಪವಿಭಾಗ ರವರು ಪಾವತಿಗಾಗಿ ಶಿಫಾರಸ್ಸು ಮಾಡಿರುತ್ತಾರೆ.

ಕೆ.ಎಫ್.ಸಿ ಕಾಯ್ದೆ ಪ್ರಕಾರ ಲೆಕ್ಕ ಪರಿಶೋಧನೆ ಮಾಡಿದ್ದು, ಬಿಲ್ಲಿನ ಒಟ್ಟು ಮೊತ್ತ ರೂ. 2486870=ಗಳಿದ್ದು, ಇದರಲ್ಲಿ ಶಾಸನ ಬದ್ಧ ಕಟಾವಣೆ ಮೊತ್ತ ರೂ: 105032=ಗಳನ್ನು ಕಟಾಯಿಸಿ ಉಳಿಕೆ ನಿವ್ವಳ ಮೊತ್ತ

5) ರೂ. 2381838=ಗಳನ್ನು ಗುತ್ತಿಗೆದಾರರಿಗೆ ಪಾವತಿಸಲು ಬಿಲ್ಲಿನ ವಿವರಗಳನ್ನು IFMS ತಂತ್ರಾಂಶದಲ್ಲಿ ಬಿ.ಆರ್.ದಾಖಲಿಸಿ ಕೇಂದ್ರ ಕಛೇರಿಗೆ ಸಲ್ಲಿಸಲು ಆದೇಶಕ್ಕಾಗಿ ಮಂಡಿಸಿದೆ.

05/08/25

Executive Engineer
Bruhat Bengaluru Mahanagara Palike
Yelahanka, Division

ಬೃಹತ್ ಬೆಂಗಳೂರು ಮಹಾನಗರ ಪಾಲಿಕೆ

ಯಲಹಂಕ ಉಪನಗರ ಉಪವಿಭಾಗ, ಬೆಂಗಳೂರು.

ಚೆಕ್ ಲಿಸ್ಟ್

ಕ್ರ. ಸ.	ವಿವರಗಳು	
1	ಕಾಮಗಾರಿಯ ಹೆಸರು	Repairs to exisiting Samudaya Bhavana at Basavalingappa Nagara in ward no:03
2	ಅಂದಾಜು ಮೊತ್ತ ರೂ.ಲಕ್ಷಗಳಲ್ಲಿ	25.00 Lkh
3	ಪರಿಷ್ಕೃತ ಟೆಂಡರ್ ಮೊತ್ತ	Rs 24,90,263/-
4	ಕಾಮಗಾರಿ ಆಯವ್ಯಯದಲ್ಲಿ ಸೇರ್ಪಡೆಯಾಗಿದೆಯೇ?	Yes
5	ತಾಂತ್ರಿಕ ಮಂಜೂರಾತಿ ಸಂಖ್ಯೆ	TS/101/23.24 dt. 12/02/24
6	ಆಡಳಿತಾತ್ಮಕ ಅನುಮೋದನೆ ಸಂಖ್ಯೆ	AS/100/23.24 dt. 12/2/24
7	ಈ ಕಾಮಗಾರಿಯ ಈ ಹಿಂದಿನ ಕೌನ್ಸಿಲ್ ಅನುಮೋದನೆ ಗೊಂಡಿರುವ ದೃಢೀಕರಣ ಪತ್ರದ ನಕಲು	———
8	ಕಾಮಗಾರಿಯು ಪಾರದರ್ಶಕ ನಿಯಮ 2000 ಹಾಗೂ ಸಂಬಂಧಿಸಿದ ಆದೇಶ ಸುತ್ತೋಲೆಯಂತೆ ನಿರ್ವಹಿಸಲಾಗಿದೆಯ?	Yes
9	ಕಾಮಗಾರಿಯನ್ನು ಕಾರ್ಯಗತ ಮಾಡಿರುವ ವಿಧಾನ	—
10	ಗುತ್ತಿಗೆದಾರರ ಹೆಸರು	Sri.PRASHANTH.M (MARADIS ENTERPRISES)
11	ಕಾಮಗಾರಿಯಬಿಲ್ಲಿನ ಮೊತ್ತ ತಾಂತ್ರಿಕ ಮಂಜೂರಾತಿ ಹಾಗೂ ಆಡಳಿತಾತ್ಮಕ ಮಂಜೂರಾತಿ ಮೊತ್ತದ ಮಿತಿಯಲ್ಲಿ ಇದೆಯೇ?	Yes

ಸಹಾಯಕ ಅಭಿಯಂತರರು,

ಸಹಾಯಕ ಕಾರ್ಯಪಾಲಕ ಅಭಿಯಂತರರು,
ಯಲಹಂಕ ಉಪನಗರ ಉಪವಿಭಾಗ,
ಬಿ.ಬಿ.ಎಂ.ಪಿ, ಬೆಂಗಳೂರು-560064.

ಕಛೇರಿ ಪರಿಶೀಲನೆ

ಕಾಮಗಾರಿಯ ಬಿಲ್ಲನ್ನು ಪರಿಶೀಲಿಸಿರುತ್ತೆ. ಇದರ ಮೊತ್ತ ರೂ 24,86,760=00 ಗಳು ಗುತ್ತಿಗೆದಾರರಾದ Prashanth M. ರವರಿಗೆ ಪಾವತಿ ಮಾಡಲು ಲೆಕ್ಕ ಶಾಖೆಗೆ ಕಡತವನ್ನು ರವಾನಿಸಿದೆ.

ಕಾರ್ಯಪಾಲಕ ಅಭಿಯಂತರರು,
ಯಲಹಂಕ ವಿಭಾಗ,
ಬಿ.ಬಿ.ಎಂ.ಪಿ, ಬೆಂಗಳೂರು.

ಬೃಹತ್ ಬೆಂಗಳೂರು ಮಹಾನಗರ ಪಾಲಿಕೆ

ಕಾರ್ಯಪಾಲಕ ಅಭಿಯಂತರರ ಕಛೇರಿ ಯಲಹಂಕ ವಿಭಾಗ

ದಿನಾಂಕ: 02/08/25

"ಪ್ರಮಾಣ ಪತ್ರ"

ಕಾಮಗಾರಿಯ ಹೆಸರು	Repairs to exisiting Samudaya Bhavana at Basavalingappa Nagara in ward no:03
ಜಾಬ್ ಕೋಡ್ ಸಂಖ್ಯೆ	003-24-000006
ಕರಾರು ಒಪ್ಪಂದದ ಸಂಖ್ಯೆ ಮತ್ತು ದಿನಾಂಕ	EE/YNK/AG/65/2023-24, dt:7/3/2024
ಕಾರ್ಯಾದೇಶ ಸಂಖ್ಯೆ ಮತ್ತು ದಿನಾಂಕ	BBMP/EE/YNK.D/EPMT/12/WO/45/2023-24, dt:9/3/2024
ಕಾಮಗಾರಿಯ ಒಟ್ಟು ಅಂದಾಜು ಮೊತ್ತ ರೂ. ಲಕ್ಷಗಳಲ್ಲಿ	Rs.25.00 lakhs

****

ಮೇಲ್ಕಂಡ ಕಾಮಗಾರಿಯು ಲೋಕಾಯುಕ್ತ/ಸಿ.ಓ.ಡಿ/ಎ.ಸಿ.ಬಿ/ಪಾಲಿಕೆ ಅಥವಾ ಮತ್ಯಾವುದೇ ತನಿಖಾ ಸಂಸ್ಥೆಯ ತನಿಖೆಗೆ ಒಳಪಟ್ಟಿರುವ ಬಗ್ಗೆ ಈ ಕಛೇರಿಗೆ ಈ ದಿನದವರೆಗೂ ಯಾವುದೇ ಮಾಹಿತಿ ಸ್ವೀಕೃತವಾಗಿರುವುದಿಲ್ಲವೆಂದು ಈ ಮೂಲಕ ದೃಢೀಕರಿಸಲಾಗಿದೆ. ಹಾಗೂ ಸದರಿ ಕಾಮಗಾರಿಯ ಜಾಬ್‌ಕೋಡ್ 003-24-000006 ಅಂದಾಜು ಮೊತ್ತ ರೂ. 25 ಲಕ್ಷಗಳಾಗಿದ್ದು, ಸದರಿ ಕಾಮಗಾರಿಯ 1st & Final ಬಿಲ್ಲಿನ ಮೊತ್ತ ರೂ. 24,862.00 ಗಳನ್ನು ಪಾವತಿಸಲು ಆನ್‌ಲೈನ್ ಮೂಲಕ ಸಲ್ಲಿಸಲಾಗಿದೆ.

ಸಹಾಯಕ ಅಭಿಯಂತರರು
ವಾರ್ಡ್ ನಂ 03

ಸಹಾಯಕ ಕಾರ್ಯಪಾಲಕ ಅಭಿಯಂತರರು
ಯಲಹಂಕ ಉಪನಗರ ಉಪವಿಭಾಗ
ಬಿಬಿಎಂಪಿ ಬೆಂಗಳೂರು-560064

ಕಾರ್ಯಪಾಲಕ ಅಭಿಯಂತರರು
ಯಲಹಂಕ ವಿಭಾಗ,
ಬಿಬಿಎಂಪಿ ಬೆಂಗಳೂರು-64

Executive Engineer
Bruhat Bengaluru Mahanagara Palike
Yelahanka, Division

ಬೃಹತ್ ಬೆಂಗಳೂರು ಮಹಾನಗರ ಪಾಲಿಕೆ

ಕಾರ್ಯಪಾಲಕ ಅಭಿಯಂತರರ ಕಛೇರಿ ಯಲಹಂಕ ವಿಭಾಗ

ದಿನಾಂಕ: 01/08/25

"ದೃಢೀಕರಣ ಪತ್ರ"

ಕಾಮಗಾರಿಯ ಹೆಸರು	Repairs to exisiting Samudaya Bhavana at Basavalingappa Nagara in ward no:03
ಜಾಬ್ ಕೋಡ್ ಸಂಖ್ಯೆ	003-24-000006
ಕರಾರು ಒಪ್ಪಂದ ಪತ್ರದ ಸಂಖ್ಯೆ ಮತ್ತು ದಿನಾಂಕ	EE/YNK/AG/65/2023-24, dt:7/3/2024
ಕಾರ್ಯಾದೇಶ ಸಂಖ್ಯೆ ಮತ್ತು ದಿನಾಂಕ	BBMP/EE/YNK.D/EPMT/12/WO/45/2023-24, dt:9/3/2024
ಅಂದಾಜು ಮೊತ್ತ ರೂ.ಲಕ್ಷಗಳಲ್ಲಿ	Rs.25.00 lakhs
ಬಿಲ್ಲಿನ ಮೊತ್ತ	24,86,760-00

****

ಮೇಲ್ಕಂಡ ನಾಮಾಂಕಿತದ ಕಾಮಗಾರಿಯನ್ನು ಕೈಗೊಳ್ಳುವ ಸಂಬಂಧ ಅಂದಾಜು ಪಟ್ಟಿ ತಯಾರಿಕೆಯಿಂದ ಹಿಡಿದು ಗುಣಮಟ್ಟದ ಕಾಮಗಾರಿಯನ್ನು ಅನುಷ್ಠಾನಗೊಳಿಸುವ ಸಂಬಂಧದ ಎಲ್ಲಾ ಹಂತದ ಪ್ರಕ್ರಿಯೆಗಳನ್ನು ನಿಯಮಾನುಸಾರ ಅನುಸರಿಸಿ, ಸದರಿ ಕಾಮಗಾರಿಯನ್ನು ನಿಯಮಾನಸಾರ ಎಲ್ಲಾ ಹಂತದ ಪ್ರಕ್ರಿಯೆಗಳನ್ನು ಅನುಸರಿಸಿ ಅನುಷ್ಠಾನಗೊಳಿಸಲಾಗಿದ್ದು, ಅನುಷ್ಠಾನಗೊಳಿಸಿರುವ ಸಂಬಂಧ ಎಲ್ಲಾ ಅವಶ್ಯ ದಾಖಲಾತಿಗಳ ಜೊತೆಗೆ ಗುಣಮಟ್ಟ ಪ್ರಮಾಣ ಪತ್ರಗಳನ್ನು ದೃಢೀಕರಿಸಿ ಹಾಗೂ ನಿಜಸ್ಥಿತಿಯ ಅಳತೆಗಳನ್ನು ತೆಗೆದು ಇ-ಅಳತೆ ಪುಸ್ತಕದಲ್ಲಿ ದಾಖಲಿಸಿ ಸಂಬಂಧಪಟ್ಟ ಸಹಾಯಕ ಅಭಿಯಂತರರು ಮತ್ತು ಸಹಾಯಕ ಕಾರ್ಯಪಾಲಕ ಅಭಿಯಂತರರು 100% Check Measurement ಹಾಗೂ ಕಾರ್ಯಪಾಲಕ ಅಭಿಯಂತರರು 25% Check Measurement ಗಳ ದಾಖಲಾತಿಗಳೊಂದಿಗೆ ಪಶ್ನಿತ ಕಾಮಗಾರಿಯು ಮೊದಲನೇ ಭಾಗಶಃ/ಎರಡನೇ ಭಾಗಶಃ ಸಂಪೂರ್ಣವಾಗಿ ಪೂರ್ಣಗೊಂಡಿರುವುದಾಗಿ ದೃಢೀಕರಿಸುತ್ತಾ, ಗುಣಮಟ್ಟ ಕಾಮಗಾರಿಯನ್ನು ಅನುಷ್ಠಾನಗೊಳಿಸಿರುವುದರಿಂದ ಕಾಮಗಾರಿಯ ಹಣ ಪಾವತಿಗೆ ಆನ್‌ಲೈನ್‌ನಲ್ಲಿ ಕಾಮಗಾರಿಯನ್ನು ಅನುಷ್ಠಾನಗೊಳಿಸಿದ ಎಲ್ಲಾ ದಾಖಲಾತಿಗಳನ್ನು ದೃಢೀಕರಿಸಿ ಅಪ್‌ಲೋಡ್ ಮಾಡುತ್ತಾ. ಸದರಿ ಕಾಮಗಾರಿಗೆ ಹಣ ಪಾವತಿ ಮಾಡಬಹುದಾಗಿರುತ್ತದೆ ಎಂದು ಈ ಮೂಲಕ ದೃಢೀಕರಿಸಿದೆ.

ಸಹಾಯಕ ಅಭಿಯಂತರರು
ವಾರ್ಡ್ ನಂ 03

ಸಹಾಯಕ ಕಾರ್ಯಪಾಲಕ ಅಭಿಯಂತರರು
ಯಲಹಂಕ ಉಪನಗರ ಉಪವಿಭಾಗ
ಬಿಬಿಎಂಪಿ ಬೆಂಗಳೂರು-560064

ಕಾರ್ಯಪಾಲಕ ಅಭಿಯಂತರರು
ಯಲಹಂಕ ವಿಭಾಗ,
ಬಿಬಿಎಂಪಿ ಬೆಂಗಳೂರು-64

Executive Engineer
Bruhat Bengaluru Mahanagara Palike
Yelahanka Division

ಬೃಹತ್ ಬೆಂಗಳೂರು ಮಹಾನಗರ ಪಾಲಿಕೆ

ಕಾರ್ಯಪಾಲಕ ಅಭಿಯಂತರರ ಕಛೇರಿ ಯಲಹಂಕ ವಿಭಾಗ

ದಿನಾಂಕ: 04/09/25

"ದೃಢೀಕರಣ ಪತ್ರ"

ಕಾಮಗಾರಿಯ ಹೆಸರು	Repairs to exisiting Samudaya Bhavana at Basavalingappa Nagara in ward no:03
ಜಾಬ್ ಕೋಡ್ ಸಂಖ್ಯೆ	003-24-000006
ಪಿ–ಕೋಡ್	
ಕರಾರು ಒಪ್ಪಂದ ಪತ್ರದ ಸಂಖ್ಯೆ ಮತ್ತು ದಿನಾಂಕ	EE/YNK/AG/65/2023-24, dt:7/3/2024
ಕಾರ್ಯಾದೇಶ ಸಂಖ್ಯೆ ಮತ್ತು ದಿನಾಂಕ	BBMP/EE/YNK.D/EPMT/12/WO/45/2023-24, dt:9/3/2024
ಅಂದಾಜು ಮೊತ್ತ ರೂ.ಲಕ್ಷಗಳಲ್ಲಿ	Rs.25.00 lakhs
ಬಿಲ್ಲಿನ ಮೊತ್ತ ರೂ /– (ಭಾಗಶಃ / ಅಂತಿಮ ಬಿಲ್ಲು)	24.868.76

****

ಮೇಲ್ಕಂಡಂತೆ ವಿವರಿಸಿರುವ ಕಾಮಗಾರಿಗೆ ಸಂಬಂಧಿಸಿದಂತೆ, ಸದರಿ ಕಾಮಗಾರಿಯು ಯಾವುದೇ ರೀತಿಯಲ್ಲಿ Overlap ಆಗಿರುವುದಾಗಲೀ ಅಥವಾ Duplication ಆಗಿರುವುದಾಗಲೀ ಆಗಿರುವುದಿಲ್ಲ, ಸದರಿ ಕಾಮಗಾರಿಯು ಇತರೆ ಯಾವುದೇ ಕಾಮಗಾರಿಯ DLP (Defect liability period) ಅವಧಿಯಲ್ಲಿ ಇಲ್ಲದಿರುವುದಾಗಿ ಹಾಗೂ ಸದರಿ ಕಾಮಗಾರಿಯನ್ನು ಬೇರೊಂದು ಕಾಮಗಾರಿ ಅಡಿಯಲ್ಲಿ ಅಥವಾ ಇತರೆ ಯಾವುದೇ ಅನುದಾನದಡಿಯಲ್ಲಿ ಕೈಗೊಳ್ಳಲು ಉದ್ದೇಶಿಸಿ ಕಾಮಗಾರಿಯನ್ನು ಕೈಗೊಂಡಿರುವುದಿಲ್ಲದಿರುವುದಾಗಿ ದೃಢೀಕರಿಸುತ್ತಾ, ಪ್ರಸ್ತುತ ಪಾವತಿಗೆ ಸಲ್ಲಿಸುತ್ತಿರುವ ಕಾಮಗಾರಿಯನ್ನು ಇದೇ ಕಾಮಗಾರಿ ಅಡಿಯಲ್ಲಿ, ಅಂದಾಜು ಪಟ್ಟಿಯಡಿಯಲ್ಲಿ ಹಾಗೂ ಇದೇ ಅನುದಾನದಡಿಯಲ್ಲಿ ಅನುಷ್ಠಾನಗೊಳಿಸಿರುವುದಾಗಿ ಈ ಮೂಲಕ ದೃಢೀಕರಿಸಿದೆ.

ಸಹಾಯಕ ಅಭಿಯಂತರರು
ವಾರ್ಡ್ ನಂ:03

ಸಹಾಯಕ ಕಾರ್ಯಪಾಲಕ ಅಭಿಯಂತರರು
ಯಲಹಂಕ ಉಪನಗರ ಉಪವಿಭಾಗ
ಬಿಬಿಎಂಪಿ, ಬೆಂಗಳೂರು-560064

ಕಾರ್ಯಪಾಲಕ ಅಭಿಯಂತರರು,
ಯಲಹಂಕ ವಿಭಾಗ, ಬಿಎಂಪಿ, ಬೆಂಗಳೂರು–64

Executive Engineer
Bruhat Bengaluru Mahanagara Palike
Yelahanka, Division

ಬೃಹತ್ ಬೆಂಗಳೂರು ಮಹಾನಗರ ಪಾಲಿಕೆ

ಕಾರ್ಯಪಾಲಕ ಅಭಿಯಂತರರ ಕಛೇರಿ ಯಲಹಂಕ ವಿಭಾಗ

ದಿನಾಂಕ: 01/08/25

"ದೃಢೀಕರಣ ಪತ್ರ"

ಕಾಮಗಾರಿಯ ಹೆಸರು	Repairs to exisiting Samudaya Bhavana at Basavalingappa Nagara in ward no:03
ಜಾಬ್ ಕೋಡ್ ಸಂಖ್ಯೆ	003-24-000006
ಕರಾರು ಒಪ್ಪಂದ ಪತ್ರದ ಸಂಖ್ಯೆ ಮತ್ತು ದಿನಾಂಕ	EE/YNK/AG/65/2023-24, dt:7/3/2024
ಕಾರ್ಯಾದೇಶ ಸಂಖ್ಯೆ ಮತ್ತು ದಿನಾಂಕ	BBMP/EE/YNK.D/EPMT/12/WO/45/2023-24, dt:9/3/2024
ಕಾಮಗಾರಿ ಒಟ್ಟು ಅಂದಾಜು ಮೊತ್ತ ರೂ.ಲಕ್ಷಗಳಲ್ಲಿ	Rs.25.00 lakhs
ಪಿ-ಕೋಡ್	1878

****

ಮೇಲ್ಕಂಡ ವಿಷಯಕ್ಕೆ ಸಂಬಂಧಿಸಿದಂತೆ, ಕಾಮಗಾರಿಯ ಗುಣಮಟ್ಟವನ್ನು ದೃಢೀಕರಿಸುವ ಸಂಬಂಧ ಮಾನ್ಯ ಮುಖ್ಯ ಆಯುಕ್ತರು ರವರ ಕಛೇರಿ ಆದೇಶದ ಸಂಖ್ಯೆ:ಮು.ಆ/ಬಿ.ಬಿ.ಎಂ.ಪಿ/ಪಿ.ಆರ್/ಜಿ/2383/2022-23, ದಿನಾಂಕ14-9-2022 ರಲ್ಲಿ ರೂ. 50 ಲಕ್ಷಗಳವರೆಗಿನ ಕಾಮಗಾರಿಗಳ ಗುಣಭರವಸೆಗೆ ಸಂಬಂಧಪಟ್ಟಂತೆ ವಿಭಾಗೀಯ ಕಾರ್ಯಪಾಲಕ ಅಭಿಯಂತರರು ಸಂಪೂರ್ಣವಾಗಿ ಜವಾಬ್ದಾರರಾಗಿರುತ್ತಾರೆ ಎಂದು ಆದೇಶಿಸಿರುವ ಹಿನ್ನಲೆಯಲ್ಲಿ ಗುಣನಿಯಂತ್ರಣ ವಿಭಾಗದಿಂದ ಪರಿಶೀಲನೆಗೆ ಒಳಪಡಿಸಿರುವುದಿಲ್ಲ. ಆದರೆ ಸದರಿ ಕಾಮಗಾರಿಯ ಗುಣಮಟ್ಟವನ್ನು ಎನ್.ಎ.ಬಿ.ಎಲ್. ಯಿಂದ ಮಾನ್ಯತೆ ಪಡೆದ ಪ್ರಯೋಗಾಲಯವಾದ TEAM FOR YOU ಇವರು ಗುಣಮಟ್ಟ ಪರೀಕ್ಷೆ ಮಾಡಿ ಗುಣ ಮಟ್ಟವನ್ನು ಖಾತ್ರಿಪಡಿಸಿರುವುದರಿಂದ ಗುಣಭರವಸೆ ವಿಭಾಗದ ವತಿಯಿಂದ ಗುಣಮಟ್ಟದ ಬಗ್ಗೆ ಅಭಿಪ್ರಾಯ ಪಡೆದಿಲ್ಲದಿರುವುದಾಗಿ ದೃಢೀಕರಿಸಿದೆ.

ಸಹಾಯಕ ಅಭಿಯಂತರರು
ವಾರ್ಡ್ ನಂ:03

ಸಹಾಯಕ ಕಾರ್ಯಪಾಲಕ ಅಭಿಯಂತರರು
ಯಲಹಂಕ ವಿಭಾಗ
ಬಿ.ಬಿ.ಎಂ.ಪಿ. ಬೆಂಗಳೂರು-560064

ಕಾರ್ಯಪಾಲಕ ಅಭಿಯಂತರರು,
Executive Engineer
Bruhat Bengaluru Mahanagara Palike
Yelahanka, Division

ಯಲಹಂಕ ವಿಭಾಗ, ಬಿಎಂಪಿ, ಬೆಂಗಳೂರು-64

EXTENSION OF TIME PROPOSAL

1	Name of work	Repairs to exisiting Samudaya Bhavana at Basavalingappa Nagara in ward no:03
2	Amount of work portion	25%.
3	Estimated Cost	Rs . 25.00 lakhs
4	Name of Contractor	Sri Prashanth M (Maradis Enterprises)
5	Agreement no	EE/YNK/AG/65/2023-24, dt:7/3/2024
6	No and date under which work order issued	BBMP/EE/YNK.D/EPMT-12/WO/45/ 2023-24, dt: 9-3-2024
7	Time limit rriginally fixed for completion	120 days
8	Date of application by the contractor for granting	Dt: 6/07/2024
9	Date of receipt of application in the Sub Division office	Dt. 6/07/2024.
10	Extension granted if any	—
	I	—
	II	—
11	Work carried out by the contractor during the original period stipulated in the contract	Dismantling the existing Sheet Roof and providing Centring work to RCC Roof structure.
12	Work carried out during 1st extension	
13	Work carries out during 2nd extension	—

14	Time now applied for	385 Days
15	Date of recommanding time 2nd extension	-
16	Weather the original application of the Contractor is enclosed	Yes
17	Balance of remaining work	Balance Remaining work Like painting & finishing work
18	Probable time required for completion of remaining work	385 ~~120~~ days
19	Cost work charged establishment charged on the work after the expairy original period	—
20	Weather notice as per clause of Contract has been issued	Yes
21	Remarks of the AEE and the daily rate of penalty proposed	As per date creation of Executive Engineer
21	Remarks of the EE and the daily rate of penalty proposed	Rs. 25 / day

Assistant Engineer

Assistant Executive Engineer

Executive Engineer,
Yelahanka Division, Bangalore-64

CE/YNK-2

Bruhath Bengaluru Mahanagara Palike.

Yalahanka Sattellite Town Sub Division, Bangalore-560064

Work Record No **Completion Report**

Name of work:-	Repairs to existing Samudaya Bhavana at Basavalingappa Nagara in ward no:03			
1) Sanctioned Estimate No. and Date :	CER.NO.40 | 12.2.24			
2) Name of Contractor	Sri.PRASHANTH.M (MARADIS ENTERPRISES)			
3) Time stipulated for completion of work	120 days			
4) Date of Commencement of Work	Dt. 09-03-2024			
5) Date of Completion of Work	Dt, 28/07/2025			
M B No	4972			
Page No	4971 2070 131.			
6) Name of the officer official incharge of the work				
1) Asst. Exe. Engineer	Ramasanjeevaiah			
2) Asst. Engineer	Mohan. N.D.			
Estimate Amount / Tender	Amount claimed asper actuals	Excess	Savings	Remarks
25 Lakhs /-	24,68,876	—	—	—

1 **Certified that the above work has been completed with in the stipulated time Sinoted in entrustment**

2 **Certified that above work has been executed satisfactorily**

AE, Ward No : 03
Yelahanka Satellite Town Sub Division
BBMP, Bangalore

Asst.Executive Engineer
Yelahanka Satellite Town Sub Division
BBMP, Bangalore

Executive Engineer
Yelahanka Division
BBMP, Bangalore

Executive Engineer
Bruhath Bengaluru Mahanagara Palike
Yelahanka Division

ಬೃಹತ್ ಬೆಂಗಳೂರು ಮಹಾನಗರ ಪಾಲಿಕೆ

ಕಾರ್ಯಪಾಲಕ ಅಭಿಯಂತರರ ಕಛೇರಿ ಯಲಹಂಕ ವಿಭಾಗ

"ದೃಢೀಕರಣ ಪತ್ರ"

ದಿನಾಂಕ: 02/04/25

ಕಾಮಗಾರಿಯ ಹೆಸರು	Repairs to exisiting Samudaya Bhavana at Basavalingappa Nagara in ward no:03
ಜಾಬ್ ಕೋಡ್ ಸಂಖ್ಯೆ	003-24-000006
ಪಿ-ಕೋಡ್	1878
ಕರಾರು ಒಪ್ಪಂದ ಪತ್ರದ ಸಂಖ್ಯೆ ಮತ್ತು ದಿನಾಂಕ	EE/YNK/AG/65/2023-24, dt:7/3/2024
ಕಾರ್ಯಾದೇಶ ಸಂಖ್ಯೆ ಮತ್ತು ದಿನಾಂಕ	BBMP/EE/YNK.D/EPMT/12/WO/45/2023-24, dt:9/3/2024
ಅಂದಾಜು ಮೊತ್ತ ರೂ.ಲಕ್ಷಗಳಲ್ಲಿ	Rs.25.00 lakhs
ಬಿಲ್ಲಿನ ಮೊತ್ತ ರೂ /- (~~ಭಾಗಶಃ~~ / ಅಂತಿಮ ಬಿಲ್ಲು)	24,86,780-00

****

ಮೇಲ್ಕಂಡ ನಾಮಾಂಕಿತದ ಕಾಮಗಾರಿಯ ಬಿಲ್ಲಿಗೆ ಸಂಬಂಧಿಸಿದ ಧೃಡೀಕೃತ ದಾಖಲೆಗಳನ್ನು **Financial code** ಪ್ರಕಾರ ಪರಿಶೀಲಿಸಿದ್ದು, **Pre-audit** ನಲ್ಲಿ ಯಾವುದೇ ನ್ಯೂನತೆ/ಲೋಪದೋಷಗಳು ಕಂಡು ಬಂದಿಲ್ಲದಿರುವುದು ಹಾಗೂ ಈ ಕಾಮಗಾರಿಯ ಬಿಲ್ಲಿಗೆ ಸಂಬಂಧಿಸಿದಂತೆ ತಹಲ್‌ವರೆಗೆ ಯಾವುದೇ ರೀತಿಯ **Audit objection** ಸಹ ಇಲ್ಲದಿರುವುದನ್ನು ಈ ಮೂಲಕ ದೃಡೀಕರಿಸಲಾಗಿದೆ.

ಲೆಕ್ಕ ~~ಅಧೀಕ್ಷಕರು~~,

ಯಲಹಂಕ ವಿಭಾಗ,

ಬೃಹತ್ ಬೆಂಗಳೂರು ಮಹಾನಗರ ಪಾಲಿಕೆ

pairs to exisiting Samudaya Bhavana at Basavalingappa Nagara in ward no:03 ನಾಮಾಂಕಿತದ ಕಾಮಗಾರಿಯ ಕ್ಕಾಗಿ ಸಂಬಂಧಿಸಿದಂತೆ ಕೆಳಕಂಡ ಅಂಶಗಳುಳ್ಳ ಮಾಹಿತಿ / ವಿವರಗಳೊಂದಿಗೆ ಎಲ್ಲಾ ಅಗತ್ಯ ದಾಖಲೆಗಳನ್ನು ಪರಿಶೀಲಿಸಿ ದೃಢೀಕರಿಸಿ ಆನ್ ಲೈನ್ ನಲ್ಲಿ ಅಪ್ ಲೋಡ್ ಮಾಡಲಾಗಿದೆ.

ಕ್ರ.ಸಂ	ಕಡತದಲ್ಲಿ ಪರಿಶೀಲಿಸಬೇಕಿರುವ ದಾಖಲೆಗಳು/ ಮಾಹಿತಿಗಳ ವಿವರ	ಕಡತದಲ್ಲಿನ ದಾಖಲೆಗಳು/ಮಾಹಿತಿಗಳು ಲಭ್ಯವಿರುವ ವಿವರ
1	ಮೂಲ ಜಾಬ್ ಕೋಡ್ ಪ್ರಮಾಣ ಪತ್ರ / Oruginal Jobcode	007-24-00006 (Enclosed.
2	ಬಿಲ್ಲಿನ ಎಲ್ಲಾ ದಾಖಲಾತಿಗಳಲ್ಲಿನ ಕಾಮಗಾರಿಯ ನಾಮಾಂಕಿತವು ಮೂಲ ಜಾಬ್ ಕೋಡ್ ನಾಮಾಂಕಿತದಂತೆ ಇರುವ ಬಗ್ಗೆ / Name of work should tally in all documents as per Original Jobcode	
3	ಅಂದಾಜುಪಟ್ಟಿ (ಅಭಿಯಂತರರ ಸಹಿ ಮತ್ತು ಮೊಹರುಗಳು) / Approved estimate with AS/TS seal	
4	ಅಂದಾಜುಪಟ್ಟಿ ನಕ್ಷೆ /ಅಳತೆ ಪುಸ್ತಕದ ನಕ್ಷೆ ಒಂದೇಯಾಗಿರುವ ಬಗ್ಗೆ / Sketch should be same in both estimate and MB	
5	ಆಡಳಿತಾತ್ಮಕ ಮೆಮೋ ಪ್ರತಿ ಮತ್ತು ದಿನಾಂಕ / Approved AS Memo and date	
6	ತಾಂತ್ರಿಕ ಮೆಮೋ ಪ್ರತಿ ಮತ್ತು ದಿನಾಂಕ / Approved TS Memo and date	Enclosed.
7	ಡಿಟಿಎಸ್ ಅನುಮೋದನೆ ಪ್ರತಿ / Approved DTS copy	
8	ಟೆಂಡರ್ ನೋಟಿಫೀಕೇಶನ್, ಪ್ರತ್ರಿಕಾ ಪ್ರಕಟಣೆ, ಜಿಲ್ಲ ಬುಲೆಟಿನ್ ಪ್ರತಿಗಳು / Tender Notification , Paper cutting and state or district bulletine copies	
9	ಆನ್ ಲೈನ್ ಟೆಂಡರ್ ಅನುಮೋದನೆ ಪ್ರತಿ / Online Tender approval copy	
10	ಎಲ್.ಓ.ಎ ಮತ್ತು ಪಿ.ಎಸ್.ಡಿ / LOA and PSD	
11	ಕರಾರು ಒಪ್ಪಂದದ ಪ್ರತಿ / Agreement Copy	
12	ಕಾರ್ಯಾದೇಶ / Work order	
13	ಷೆಡ್ಯೂಲ್-ಬಿ / Schedule B	
14	ಜಿಯೋ ಟ್ಯಾಗ್ ಛಾಯಾಚಿತ್ರಗಳು / Geo Tag Photos	
15	ಆನ್ ಲೈನ್ ರಸ್ತೆ ವಹಿ / Approved Online Road History	NA.
16	Standard Tender Documents	Enclosed.
17	I. Measurement Book/E-MB Shall have	–
	Following:-	
	Name of the work	Yes

	Work order No and date	45 | 09-03.2024
	Date of Pre-measurements / Measurements (RA/Final etc... as the case may be but the dates shuld be After Work order)	Yes
	should be After work order Date	Yes
	Item Wise Measurement (as per standard recording requirements)	
	Check Measurement with date / dates by the concerned AEE / EE as per codal requirements	
	Completion certificate as the case may be.	
	Sketch recorded in the measurement book (for Items /works executed)- tallies which sketches as per original Sanctioned estimate	
	In case of final Bills / Claims, the agency shall accept in writing as per codal Procedure	
	Divisional accounts officials shall check and verify the arithmetical calculation as required under A code.	varified.
18	I. In case of deviation of the quanities Work slip / EIRL during execution:-	
	For deviation in quantity deviation carried out / executed over and above sanction BOQ	
	Chief Engineer Inspection report	
	Approval of Work Slip (PWG-4S-A code-II)	
	Approval of EIRL (PWG-195, D Code-I)	
	Acceptance letter by agency to carry out additional items	
	Supplementary agreement { (D Code-I) (195 (8) (9) (10) }	NA
19	II Depending on the quantities variations and amount modified / revised estimate with Adminstrative Approval and Technical sanction details as the case	
	may be.	
	Name of the work	
	Work order No and date	
	Date of Measurements Recorded (including Pre-measurements)	
	Check measurement date by AEE	
	Acceptance Signature of Agency	yes
	SBR No with date	13 | 01-08.25

	B.R No with date	
	Quantity of recorded items in contract certificate shall tally with the measurement book and BOQ	Yes.
	Statutory deductions as per prevailing norms code.	deducted.
20	**IV. Other details:-**	
	Completion certificates duly certified by the competent authority in case of final bills { (D Code-) 185(d)) {(Form PWG-46- A code-II))	E.E. certified
	Penalty in case of delay in completion of works.	Yes
	E 0 T (Extension of Time) — Accorded if any as per norms.	Yes
	Price Adjustment (if the clause included in the tender)	———
	Quality Assurance test reports as per MORT & H or other relevant standards. (No of tests reports / results should be on par with the frequency as stipulated in MORT&H or other relevant standards)	Yes

Account Superintendent,
Yelahanka Divisioin,
BBMP, Bangalore-64

Original/Duplicate/Triplicate

CONTRACT CERTIFICATE

(For Other Works)

AEE, YSTSD

DBR No: 20 13/25-26

Date: 01/08/2025

First and Final Bill

Division : **Yelahanka** **Sub-division :Yelahanka New Town**

YNK-DBR No.....
Date.....

No.....Date.....

No..... Cash Book Voucher No.....Dated.....

Name of Work :-(as per Sanctioned Estimate) :-**Repairs to Existing Samudaya Bhavana at Basavalingappa Nagar In Ward No.03** Head of Account.....

Name of Contractor and full address: **Sri.Prashananth M (MARADIS ENTERPRISES) # No.562, Down Bazar Road, Yelahanka, Bangalore-560064**

Job Code No: 003-24-000006

Reference to agreement No :- EE/YNK/AG/No/65/23-24 Date:07-03-2024

Certified that the measurments were taken by me on 28/07/2025 and recorded on pages :.....to .....of measurment book No. ..... and that the work is satisfactorily executed.

Signature of contractor

28/07/2025

Certified that the measurments were taken by me on..... and recorded correct.The work is satisfactorily executed.

Officer-in-charge of Work

Certified that the quantities of materials shown in column 3 of account II have been actualy brought to site of work and the contractor has not previously received any advance on this security. These materials are of any imperishable nature and are all required by the contractor for immidiate use on the work in connection with items for which rates finished work have been agreed upon.A formal agreement signed and executed by the contractor is recorded in divisional office.

If Memorandum of Patment

1) Total value of work done or supplies as per A/c within

2) Deduct amount to be held in reserve being..... percent Rs.....

3) Balance

4) Deduct payments

a) Amount of previous payment as in divisional/sub divisional cash book vr No.....dated.....S.D No.....

..... cash advance recovery of

b) payments.....cost of store or other materials supplied now made recovery of amount creditable to this/other work.

Amount paid on this bill by cheque/cash

Total

5). Balance being unpaid value of work done held in reserve

6) Deduct cash of advance made on divisional/sub divisional cash book vr No.....dated.....last adjustment.

7) Net amount due to or from contractor.

UN ADJUSTED ITEMS

8) Advance to contractor for materials to site(as detailed within)

9) Value of government materials supplied.

TOTAL AMOUNT UN-ADJUSTED

Sub-division office

Amount to be paid

Bill Amount	2100252
(+) GST	379353
TOTAL	2486876
Less : I.Tax	21075
SGST	21075
CGST	21075
BCWWC	21075
CBF	2107
ROYALTY	9000
FINE	9625
FSD	—
OTHERS	—
TOTAL DEDUCTION	105032
NET PAY	2381844

Contractor's signatures

Received Rs.....(in words).....

.....

.....by cash cnd by adjustment at Payment as per memorandum.

(in final settlement of all demand)

Witness

1)

2)

Stamp

Dated .....

signature of contractor

Paid by me cheque No.....Dated:.....

Rs.....Dated:.....

Initials of officer making payment

Audited & Admitted for Rs. 2486876:00

(For use in the Office)

2

2381844:00 by Cheque

and Rs. 105032:00 by Adjusement

Asst. Supdt.
Yelahanka Division
BBMP

Exe. Engineer
Yelahanka Division
BBMP

Executive Engineer

Sl No	Description of Items	Unit	As Per Schedule-B	Previous Measurement		Present Measurement			Total Up to date		Remarks
			Qty	Qty	Amount	Qty	Rate	Amount	Qty	Amount	
1	Dismantling doors, windows and clerestory windows (steel or wood) shut ter including chowkhats, architrave, holdfasts etc. complete and stacking to the appropriate disposal area as per direction of Engineer-in-charge.	Sqm	49.85			49.85	288.00	14356.80	49.85	14356.80	
2	Dismantling cement asbestos or other hard board ceiling or partition walls including stacking of serviceable materials and disposal of unserviceable materials to the appropriate disposal area as per direction of Engineer in-charge.	Cum	100.80			100.80	40.00	4032.00	100.80	4032.00	
3	Dismantling steel work in built up sections in angles, tees, flats and chan nels including all gusset plates, bolts, nuts, cutting rivets, welding etc. including dismembering and stacking to the appropriate disposal area as per direction of Engineer-in-charge.	Kgs	2304.00			2304.00	4.40	10137.60	2304.00	10137.60	
4	Clearing and grubbing road land including uprooting rank vegetation, grass, bushes, shrubs, saplings and trees girth up to 300 mm, removal of stumps of trees cut earlier and disposal of unserviceable materials and stacking of serviceable material to be used or auctioned, including removal and disposal of top organic soil not exceeding 150 mm in thickness.	Cum	1.81			1.81	1234.20	2233.90	1.81	2233.90	
5	Construction of Embankment by excavating the available approved Gravel/ Murrum deposited at a place or borrow pits during or prior excavation with all lifts and lead, transportation to site, spreading, grading to required slope and compacting to meet the requirement complete as per specifications, including cost of labour,rolling,water,all materials,usage& all other appurtenaces required to complete the work.	Cum	45.00			45.00	521.00	23445.00	45.00	23445.00	

Sl No	Description of Items	Unit	As Per Schedule-B	Previous Measurement		Present Measurement			Total Up to date		Remarks
			Qty	Qty	Amount	Qty	Rate	Amount	Qty	Amount	
6	Providing and laying in position Cement Concrete for all Super structures of building , Road works, Water works, Irrigation works & super structure works of bridges upto 3.50 m height. The granite/trap/basalt crushed graded coarse aggregates and fine aggregates as per relevant IS Codes machine mixed with super plasticisers laid in layers, well compacted using needle vibrators. The cost includes all lead & lifts, cost of all materials, quality confirming to the requirements of relevant IS codes , labour, Usage charges of machinery, curing and all other appurtenances required to complete the work as per technical specifications.M25 Design Mix Using 20 mm nominal size graded crushed coarse aggregates	Cum	6.55			6.42	12164.00	78107.48	6.42	78107.48	
7	Providing and laying in position Cement Concrete for all Super structures of building , Road works, Water works, Irrigation works & super structure works of bridges upto 3.50 m height. The granite/trap/basalt crushed graded coarse aggregates and fine aggregates as per relevant IS Codes machine mixed with super plasticisers laid in layers, well compacted using needle vibrators. The cost includes all lead & lifts, cost of all materials, quality confirming to the requirements of relevant IS codes , labour, Usage charges of machinery, curing and all other appurtenances required to complete the work as per technical specifications.M25 Design Mix Using 20 mm nominal size graded crushed coarse aggregates	Cum	14.36			14.36	11403.00	163747.08	14.36	163747.08	

Sl No	Description of Items	Unit	As Per Schedule-B	Previous Measurement		Present Measurement			Total Up to date		Remarks
			Qty	Qty	Amount	Qty	Rate	Amount	Qty	Amount	
8	Supplying, fitting and placing TMT FE 550 / 550D Steel Reinforcement including cost of all materials, machinery, labour, cleaning, straightening, cutting, bending, hooking, laping/welding joints, tying with binding wire / soft annealed steel wire and other ancilary operations complete as per drawing and technical specification.	Tonne	3.46			3.46	99386.00	343875.56	3.46	343875.56	
9	Providing and constructing load bearing wall with Solid Concrete blocks of size 400x150x200mm having block density more than 1800kg/m3 and minimum compressive strength of 4.00 N/mm2 conforming to IS 2185 (Part - I) - 2005 and constructed with CM 1:4 as per IS 2572:2005 including cost of all materials, labour, scaffolding and curing, usage charges of machinery etc complete as per specifications	Sqm	30.29			30.29	1367.00	41406.43	30.29	41406.43	
10	Providing 20 mm cement plaster of mix :1:4 (1 cement: 4 fine sand) to brick/stone masonry including rounding off corners wherever required smooth rendering, providing and removing scaffolding, including cost of materials, labour, curing complete as per specifications and as per direc tions of Engineer-in-charge	Sqm	96.96			96.96	393.00	38105.28	96.96	38105.28	
11	Providing 15 mm cement plaster with cement mortar 1:3 (1 cement: 3 coarse sand) finished with a floating coat of neat cement on the rough side of single or half brick wall including rounding off corners wherever required smooth rendering, providing and removing scaffolding, including cost of materials, labour, curing complete as per specifications and as per directions of Engineer-in-charge.	Sqm	49.34			49.34	406.00	20032.04	49.34	20032.04	

Sl No	Description of Items	Unit	As Per Schedule-B	Previous Measurement		Present Measurement			Total Up to date		Remarks
			Qty	Qty	Amount	Qty	Rate	Amount	Qty	Amount	
12	Providing 12 mm cement plaster with cement mortar 1:6 (1 cement: 6 fine sand) including rounding off corners wherever required smooth rendering, providing and removing scaffolding, including cost of materials, labour, curing complete as per specifications and as per directions of Engineer-in-charge.	Sqm	86.67			86.67	267.00	23140.89	86.67	23140.89	
13	Repairs to plaster in patches of 2.5 m2 and less in walls, ceilings 10 to 20mm thick in cement mortar 1:3 including cutting the patches in proper shape and replastering the surface of the wall including disposal of rubbish with a lead of 50m including curing cost of materials, labour, complete as per specification.	Sqm	193.28			193.28	438.00	84656.64	193.28	84656.64	
14	Removing white wash or colour wash by steel brushing and / or scraping, sand papering and preparing wall surface smooth including repairs to scraches including cost of labour, material complete as per specifications.	Sqm	324.98			324.98	14.30	4647.21	324.98	4647.21	
15	Removing white wash or colour wash by steel brushing and / or scraping, sand papering and preparing wall surface smooth including repairs to scraches including cost of labour, material complete as per specifications.	Sqm	205.71			205.71	14.44	2970.45	205.71	2970.45	
16	Providing and applying white cement based putty of average thickness 1 mm, of approved brand and manufacturer, over the plastered wall surface to prepare the surface even and smooth complete as per specifications and as per directions of Engineer in charge.	Sqm	102.23			102.23	110.00	11245.30	102.23	11245.30	

Sl No	Description of Items	Unit	As Per Schedule-B	Previous Measurement		Present Measurement			Total Up to date		Remarks
			Qty	Qty	Amount	Qty	Rate	Amount	Qty	Amount	
17	Providing and applying white cement based putty of average thickness 1 mm, of approved brand and manufacturer, over the plastered wall surface to prepare the surface even and smooth complete as per specifications and as per directions of Engineer in charge.	Sqm	101.48			97.02	111.00	10769.22	97.02	10769.22	
18	Applying one coat of water thinnable cement primer of approved brand and manufacture on wall surface :Water thinnable cement primer to give an even shade after thoroughly brooming the surface to remove all dirt, dust, mortar drops and foreign matter including preparing the surface even and sand paper smooth, cost of materials, labour complete as per specifications and as per directions of Engineer-in-charge.	Sqm	324.98			324.98	58.00	18848.84	324.98	18848.84	
19	Applying one coat of water thinnable cement primer of approved brand and manufacture on wall surface :Water thinnable cement primer to give an even shade after thoroughly brooming the surface to remove all dirt, dust, mortar drops and foreign matter including preparing the surface even and sand paper smooth, cost of materials, labour complete as per specifications and as per directions of Engineer-in-charge.	Sqm	205.71			205.71	58.00	11931.18	205.71	11931.18	
20	Finishing walls with textured exterior paint of required shade :New work (Two coats applied @ 3.28 L/10 m^2) over and including priming coat of exterior primer applied @ 2.20kg/10 m^2 to give an even shade after thoroughly brooming the surface to remove all dirt, dust, mortar drops and foreign matter including preparing the surface even and sand paper smooth, cost of materials, labour complete as per specifications and as per directions of Engineer-in-charge.	Sqm	119.79			119.79	311.00	37254.69	119.79	37254.69	

Sl No	Description of Items	Unit	As Per Schedule-B	Previous Measurement		Present Measurement			Total Up to date		Remarks
			Qty	Qty	Amount	Qty	Rate	Amount	Qty	Amount	
21	Finishing walls with textured exterior paint of required shade :New work (Two coats applied @ 3.28 L/10 m²) over and including priming coat of exterior primer applied @ 2.20kg/10 m² to give an even shade after thoroughly brooming the surface to remove all dirt, dust, mortar drops and foreign matter including preparing the surface even and sand paper smooth, cost of materials, labour complete as per specifications and as per directions of Engineer-in-charge.	Sqm	104.24			104.24	314.00	32731.36	104.24	32731.36	
22	Finishing with Deluxe Multi surface paint system for interiors and exteriors using Primer as per manufacturers specifications: Two coats applied on walls @ 1.25 L/10 m² over and including one coat of Special primer applied @ 0.75 L/10 m² with paint of approved quality to give an even shade, after thoroughly brooming the surface to remove all dirt, dust, mortar drops and foreign matter including preparing the surface even and sand paper smooth, cost of materials, labour complete as per specifications and as per directions of Engineer-in-charge. (The gloss should be 50% @ 60 degree angle with 10 years life)	Sqm	102.23			102.23	173.00	17685.79	102.23	17685.79	

Sl No	Description of Items	Unit	As Per Schedule-B	Previous Measurement		Present Measurement			Total Up to date		Remarks
			Qty	Qty	Amount	Qty	Rate	Amount	Qty	Amount	
23	Finishing with Deluxe Multi surface paint system for interiors and exteriors using Primer as per manufacturers specifications: Two coats applied on walls @ 1.25 L/10 m² over and including one coat of Special primer applied @ 0.75 L/10 m² with paint of approved quality to give an even shade, after thoroughly brooming the surface to remove all dirt, dust, mortar drops and foreign matter including preparing the surface even and sand paper smooth, cost of materials, labour complete as per specifications and as per directions of Engineer-in-charge. (The gloss should be 50% @ 60 degree angle with 10 years life)	Sqm	101.47			97.02	175.00	16978.50	97.02	16978.50	
24	Providing and fixing T-iron frames for doors, windows and venti lators of mild steel Tee-sections, joints mitred and welded, including fixing of necessary butt hinges and screws and applying a priming coat of approved steel primer: Fixing with 15x3 mm lugs 10 cm long embed ded in cement concrete block 15x10x10 cm of C.C. 1:3:6 (1 Cement : 3 coarse sand : 6 graded stone aggregate 20 mm nominal size) including cost of materials, labour, usage charges of machinery complete as per specifications and as per directions of the Engineer-in-Charge.	Kgs	1631.14			1631.14	136.00	221835.04	1631.14	221835.04	

Sl No	Description of Items	Unit	As Per Schedule-B	Previous Measurement		Present Measurement			Total Up to date		Remarks
			Qty	Qty	Amount	Qty	Rate	Amount	Qty	Amount	
25	Painting with synthetic enamel paint of approved brand and manufacture of required colour to give an even shade :Two coats on new work over an under coat of suitable shade with ordinary paint of approved brand and manufacture after thoroughly brooming the surface to remove all dirt, dust, mortar drops and foreign matter including preparing the surface even and sand paper smooth, cost of materials, labour complete as per specifications and as per directions of Engineer-in-charge.	Sqm	131.36			131.36	183.00	24038.88	131.36	24038.88	
26	Providing and fixing hand rail of approved size by welding etc. to steel ladder railing, balcony railing, staircase railing and similar works, including applying priming coat of approved steel primer. G.I. pipes including cost of materials, labour, usage charges of machinery complete as per specifications and as per directions of the Engineer-in-Charge.	Kgs	113.40			113.40	201.00	22793.40	113.40	22793.40	
27	Providing Honne wood frames of doors, windows, clerestory windows, ventilators and other frames, wrought, framed or assembled including making plaster groves (excluding cost of cement concrete and side clamps), but including cost of materials, labour, usage charges complete as per specifications.	Sqm	0.32			0.32	########	48601.92	0.32	48601.92	
28	Providing and fixing in position fully panelled Honne wood shutters for doors with stiles and rails of 40mm. thick with bottom and lock rails 180mm wide top rail and stiles 100mm wide as per drawing and panels of 25mm thick including cost of materials, labour, usage charges complete as per specifications. (excluding cost of fixtures)	Sqm	11.60			11.60	8188.00	94980.80	11.60	94980.80	

Sl No	Description of Items	Unit	As Per Schedule-B	Previous Measurement		Present Measurement			Total Up to date		Remarks
			Qty	Qty	Amount	Qty	Rate	Amount	Qty	Amount	
29	Painting wood work with Deluxe Multi Surface Paint of required shade. Two coat applied @ 0.90L/10 m² over an under coat of primer applied @0.75 L/10 m² of approved brand and manufacture to give an even shade including preparing the surface after thorougly cleaning oil, grease, dirt and foreign matter, sand papering and knotting , cost of materials, labour complete as per specifications and as per directions of Engineer-in-charge.	Sqm	23.20			23.20	151.00	3503.20	23.20	3503.20	
30	Painting Steel work with Deluxe Multi Surface Paint to give an even shade. Two coat applied @ 0.90L/10 m² over an under coat of primer applied @ 0.80 L/10 m² of approved brand and manufacture including preparing the surface after thorougly cleaning oil, grease, dirt and foreign matter, cost of materials, labour complete as per specifications and as per directions of Engineer-in-charge.	Sqm	23.20			23.20	152.00	3526.40	23.20	3526.40	
31	Providing and laying water proofing treatment to the Roof with PU based single component elastomeric pure polyurethane based coating on New terrace/Chajjas/Sunken portion of WC:Bathroom, cold applied PU wa terproofing membrane that is highly elastic with elongation greater than 400% and tensile strength greater than 2MPa as per ASTM D412. The waterproofing membrane to be applied in 2coats @ 1.6 kg/m2 to achieve final DFT (Dry Film Thickness) of 1mm including prime coat of epoxy primer @150 g/m2 and protection with 120gsm Geo-textile over the wa terproofing membrane. The finished cost to include surface preparation, making coving at Junction, Bore Packing, treatment of construction joints completely as per specification.	Sqm	136.92			136.52	907.00	123825.91	136.52	123825.91	

Sl No	Description of Items	Unit	As Per Schedule-B	Previous Measurement		Present Measurement			Total Up to date		Remarks
			Qty	Qty	Amount	Qty	Rate	Amount	Qty	Amount	
32	Earth work in surface excavation by manual means for lowering & leveling the ground by chiselling and wedging in Hard rock for all works other than foundation & depth not exceeding 100 mm as per drawing and technical specifications, including setting out, barricading, caution lights, dressing of excavated surfaces, disposing off the excavated spalls/stuff & stacking the selected spall/ stuff for reuse in a radius of 50 m and lift upto 1.5 m including cost of labour, tools, usage & other appurtenances required to complete the work	Cum	36.14			36.11	194.00	7005.53	36.11	7005.53	
33	Providing and laying in position Cement Concrete for levelling course for all works in foundation. The granite/trap/basalt crushed graded coarse aggregates and fine aggregates as per relevant IS Codes machine mixed, laid in layers not exceeding 150 mm thickness, well compacted using plate vibrators, including all lead & lifts, cost of all materials of quality, labour, Usage charges of machinery, curing, and all the other appurtenances required to complete the work as per technical specifications.Mix 1:3:6 Using 20 mm nominal size graded crushed coarse aggregates	Cum	27.10			27.08	6838.00	185195.26	27.08	185195.26	
34	Providing and laying 60mm thick factory made precast M - 30 grade Cement Concrete Paver Block as per IRC SP 63:2018 & IS 15658 for Cycle Tracks & Pedestrian Footpaths of approved shape and colour, laid in required pattern and including over 30mm thick compacted bed of coarse sand, filling the joints with fine sand etc. all complete as per the direction of Engineer-in charge. (WMM/WBM Base to be paid separately if necessary as per relevant technical specification)	Sqm	180.69			180.56	1174.00	211971.57	180.56	211971.57	

Sl No	Description of Items	Unit	As Per Schedule-B	Previous Measurement		Present Measurement			Total Up to date		Remarks
			Qty	Qty	Amount	Qty	Rate	Amount	Qty	Amount	
35	Supplying heavy gauge PVC conduit pipe ..... dia ..... mm thick confirming to IS 2509 with suitable size bends, junction boxes,adhesive paste etc , and fixing using inverted wood plugs in case of RCC ceiling and RCC wall/ stone structure or rawl plugs in case ofbrick walls and cement plastering the damaged portion using heavy gauge saddles at an interval of 700mm using NF screws.25 mm dia 2 mm thick	Mtr	25.00			25.00	81.00	2025.00	25.00	2025.00	
36	Supplying heavy gauge PVC conduit pipe ..... mm dia.....mm thick confirming to IS 2509 with suitable size bends, metal/PVC Junction boxes, adhesive paste etc., and running before concreting the slab. The conduit should be tied to the reinforcement rods by using binding wires and unused ways of junction boxes and pipe ends should be covered using PVC end enclosures, run with 18SWG GI fish wire wherever necessary.25 mm dia 2 mm thick	Mtr	25.00			25.00	78.00	1950.00	25.00	1950.00	
37	Groove cutting in the wall and fixing by bracing U or J hooks and cement plastering upto the wall surface and run with 18 SWG GI fish wire run throughout the conduit wherever necessary.25 mm dia 2 mm thick	Mtr	25.00			25.00	79.00	1975.00	25.00	1975.00	
38	Supplying and fixing sheet Metal box made out of 18 SWG sheet metal with necessary holes for cable/conduit entry as required with one coat of primer of approved make etc.135 x 75 x 65 mm	Each	10.00			10.00	139.00	1390.00	10.00	1390.00	
39	Supplying and fixing sheet Metal box made out of 18 SWG sheet metal with necessary holes for cable/conduit entry as required with one coat of primer of approved make etc.180 x 90 x 65 mm	Each	10.00			10.00	161.00	1610.00	10.00	1610.00	

Sl No	Description of Items	Unit	As Per Schedule-B	Previous Measurement		Present Measurement			Total Up to date		Remarks
			Qty	Qty	Amount	Qty	Rate	Amount	Qty	Amount	
40	Supplying and fixing sheet Metal box made out of 18 SWG sheet metal with necessary holes for cable/conduit entry as required with one coat of primer of approved make etc.200 x 90 x 65 mm	Each	10.00			10.00	179.00	1790.00	10.00	1790.00	
41	Supplying and fixing PVC/metal conduit Deep junction box	Each	10.00			10.00	56.00	560.00	10.00	560.00	
42	Supplying and fixing PVC/metal conduit Deep junction box.32 mm deep Junction box.32 mm deep Junction box	Each	10.00			10.00	61.00	610.00	10.00	610.00	
43	Supplying and flush mounting teak wooden box without front plank, made of not less than 12 mm thick wood, after due groove cutting, finishing with necessary cement plastering complete.12" x 12" x 3" (300 x 300 x 76 mm)	Each	10.00			10.00	120.00	1200.00	10.00	1200.00	
44	Supplying and flush mounting teak wooden box without front plank, made of not less than 12 mm thick wood, after due groove cutting, finishing with necessary cement plastering complete.12" x 9" x 3" (300 x 228 x 76 mm)	Each	10.00			10.00	115.00	1150.00	10.00	1150.00	

Sl No	Description of Items	Unit	As Per Schedule-B	Previous Measurement		Present Measurement			Total Up to date		Remarks
			Qty	Qty	Amount	Qty	Rate	Amount	Qty	Amount	
45	Supplying and wiring adopting loop system in existing PVC Conduit /casing capping using 2x1.5Sqmm (Phase & Neutral) & 1x1.0 sqmm (Earth wire) FRLS multi strand PVC insulated copper wire (confirming to IS-694: and latest amendments) with a 6Amps flush type SP control switch shall be fixed on the existing plastic sheet/ gang box, the other end of the wires shall be terminated with sufficient loose length in a wood/PVC round block. complete for each outlet.Short point upto 3Mtr from tapping point to out let via switch	Point	10.00			10.00	285.00	2850.00	10.00	2850.00	
46	Supplying and wiring adopting loop system in existing PVC Conduit /casing capping using 2x1.5Sqmm (Phase & Neutral) & 1x1.0 sqmm (Earth wire) FRLS multi strand PVC insulated copper wire (confirming to IS-694: and latest amendments) with a 6Amps flush type SP control switch shall be fixed on the existing plastic sheet/ gang box, the other end of the wires shall be terminated with sufficient loose length in a wood/PVC round block. complete for each outlet.Medium point above 3Mtr upto 6Mtr from tapping point to out let via switch	Point	10.00			10.00	394.00	3940.00	10.00	3940.00	
47	Supplying and wiring adopting loop system in existing PVC Conduit/casing capping casing capping using 2x1.5Sqmm (Phase & Neutral)& 1x1.0 sqmm (Earth wire) FRLS multi strand PVC insulatedcopper wire (confirming to IS-694: and latest amendments) without control switch shall be fixed on the existing plastic sheet/ gang box, the other end of the wires shall be terminated with sufficient loose length in a wood/PVC round block. complete for each outlet.Short point upto 3Mtr from tapping point to out let via switch box	Point	10.00			10.00	269.00	2690.00	10.00	2690.00	

Sl No	Description of Items	Unit	As Per Schedule-B	Previous Measurement		Present Measurement			Total Up to date		Remarks
			Qty	Qty	Amount	Qty	Rate	Amount	Qty	Amount	
48	Supplying and wiring adopting loop system in existing PVC Conduit/casing capping casing capping using 2x1.5Sqmm (Phase & Neutral)& 1x1.0 sqmm (Earth wire) FRLS multi strand PVC insulatedcopper wire (confirming to IS-694: and latest amendments) without control switch shall be fixed on the existing plastic sheet/ gang box, the other end of the wires shall be terminated with sufficient loose length in a wood/PVC round block. complete for each outlet.Medium point above 3Mtr upto 6Mtr from tapping point to out let via switch box	Point	10.00			10.00	379.00	3790.00	10.00	3790.00	
49	Supplying and fixing superior quality modular switch mounting polycarbonate plate with necessary supporting back plate with required nos. of machine screws, bolts nuts etc., complete on the existing metal/PVC box	Each	35.00			35.00	234.00	8190.00	35.00	8190.00	
50	Supplying and fixing of modular switch & connected accessories on existing modular switch plate as per IS 3854 and IS 1293.6A One Way Switch	Each	25.00			25.00	102.00	2550.00	25.00	2550.00	
51	Stepped Fan Regulator Two Module.	Each	12.00			12.00	357.00	4284.00	12.00	4284.00	
52	16A One Way Switch	Each	4.00			4.00	180.00	720.00	4.00	720.00	
53	32A DP Switch	Each	2.00			2.00	326.00	652.00	2.00	652.00	
54	6/16A Universal Socket	Each	10.00			10.00	236.00	2360.00	10.00	2360.00	

Sl No	Description of Items	Unit	As Per Schedule-B	Previous Measurement		Present Measurement			Total Up to date		Remarks
			Qty	Qty	Amount	Qty	Rate	Amount	Qty	Amount	
55	Supplying and fixing 32A security and energy saving DP switch with key tag suitable to operate on 230 V, 50Hz AC supply & completely wired on existing box	Each	5.00			5.00	646.00	3230.00	5.00	3230.00	
56	Wiring for lighting/power circuit using one of FRLS PVC insulated 1100V grade, multistrand copper wire with low conductor resistance single core in open or concealed system of wiring with specified IS- 694:2010	Mtr	450.00			450.00	19.00	8550.00	450.00	8550.00	
57	Wiring for lighting/power circuit using one of FRLS PVC insulated 1100V grade, multistrand copper wire with low conductor resistance single core in open or concealed system of wiring with specified IS- 694:2010	Mtr	300.00			300.00	26.00	7800.00	300.00	7800.00	
58	Wiring for lighting/power circuit using one of FRLS PVC insulated 1100V grade, multistrand copper wire with low conductor resistance single core in open or concealed system of wiring with specified IS- 694:2010	Mtr	75.00			75.00	92.00	6900.00	75.00	6900.00	
59	Wiring for lighting/power circuit using one of FRLS PVC insulated 1100V grade, multistrand copper wire with low conductor resistance single core in open or concealed system of wiring with specified IS- 694:2010	Mtr	30.00			30.00	167.00	5010.00	30.00	5010.00	
60	Wiring for lighting/power circuit using one of FRLS PVC insulated 1100V grade, multistrand copper wire with low conductor resistance single core in open or concealed system of wiring with specified IS- 694:2010	Mtr	50.00			50.00	318.00	15900.00	50.00	15900.00	
61	Supplying and fixing of PVC casing and capping on the wall or ceiling using necessary materials like bends, junction box, elbows, screws at an interval of 300 mm as required.	Mtr	50.00			50.00	28.00	1400.00	50.00	1400.00	

Sl No	Description of Items	Unit	As Per Schedule-B	Previous Measurement		Present Measurement			Total Up to date		Remarks
			Qty	Qty	Amount	Qty	Rate	Amount	Qty	Amount	
62	Supplying PVC flexible conduit pipe .... mm dia fixing on surface over inverted tapered wooden plugs or phill plugs or rawl plugs and clamped using heavy gauge saddles at an interval of 300 mm using NF screws and on either end of the pipe terminated completely.20 mm	Mtr	50.00			50.00	19.00	950.00	50.00	950.00	
63	Supplying 4 mm thick white plastic plate and covering for junction boxes of size .....:. mm conduit using necessary machine screws.110 mm	Nos	15.00			15.00	21.00	315.00	15.00	315.00	
64	Supplying 50mm wooden plug, tapered from 50x50mm to 25x25mm and fixing by using binding wire before concreting a roof slab.	Nos	20.00			20.00	12.00	240.00	20.00	240.00	
65	Supplying of .....feet -PVC Batten with integrated LED tube .... W with high quality diffuser with Life of 25000 burning hours & 70% lumen maintenance with CRI > 80. Power Input: 220-240V@ 50/60Hz & Power factor >0.9 along with CE approved. 2 years Warranty against any manufacturing defect working under standard electrical condition.LED light fitting 1 x 4' - 20/22 W	Nos	15.00			15.00	690.00	10350.00	15.00	10350.00	
66	Supply of round/square recess/surface mounted rolling type LED Down light with ..... W GU 10 LED Lamp Rib Fabricated from diecast aluminium with white powder coated prewired to mains connector & has swivelling unit of aluminium die cast eye ball & LED Lamp position retained by circular wire spring, with Life of 25000 burning hours & 70% lumen maintenance with CRI > 80. Power Input: 220-240V @50/60Hz & Power factor >0.9 along with CE approved. 2years Warranty against any manufacturing defect working under standard electrical condition.LED square or round down light 10-12W	Nos	10.00			10.00	885.00	8850.00	10.00	8850.00	

Sl No	Description of Items	Unit	As Per Schedule-B	Previous Measurement		Present Measurement			Total Up to date		Remarks
			Qty	Qty	Amount	Qty	Rate	Amount	Qty	Amount	
67	Supplying of Ceiling Fan with Capacitor rating As per guideline of BEE 5 star rating and IS:374/19 and also comply with IS: 1709/1984 with latest amendment, Rated voltage 220 V/50 Hz, Rated power upto 35 W +/- 10 %, Rated current As per IS:374/19, Rated power factor 0.9 lagging(min), Rated speed 350 +/- 10% RPM, Rated air delivery 210 +/- 10% Cubic Meter Minimum, Rated service value 6.2 CMM / W, Three Blades of blade leaf 1.05 mm thick Aluminium Alloy sheet, Class B motor insulation, Bearing Two ball bearings, Top 6202, Bottom 6201, as per IS specification, Motor winding. Temp rise Shall not exceed 75 deg C over and ambient of 40 0C by resistance method at 245 V, Insulation resistance Shall not be less than Two Mega Ohms (2M Ohms), Leakage current Should not exceed 210 Micro Amp, Power input, W& current, Air Delivery & Fan Speed as per IS:374/2019 with latest amendment, 2year manufacturer Warranty. (BLDC fans).48" Sweep 5 Star (1200 mm)	Each	12.00			12.00	2677.00	32124.00	12.00	32124.00	
							Sub Total	2107522.16		2107522.16	
							Add GST 18% GST Charges	379353.99		379353.99	
							Grand Total	2486876.15		2486876.15	

Certificate:

1 Certified that the contractor has work done satisfactorily.
2 The contractor has removed the debries from work site.
3 There is no dept. materials issued to the contractor.

Assistant Engineer
Ward -03
BBMP

Assistant Executive Engineer
Yelahanka New Town Sub Division
BBMP

Executive Engineer
Yelahanka Division
BBMP

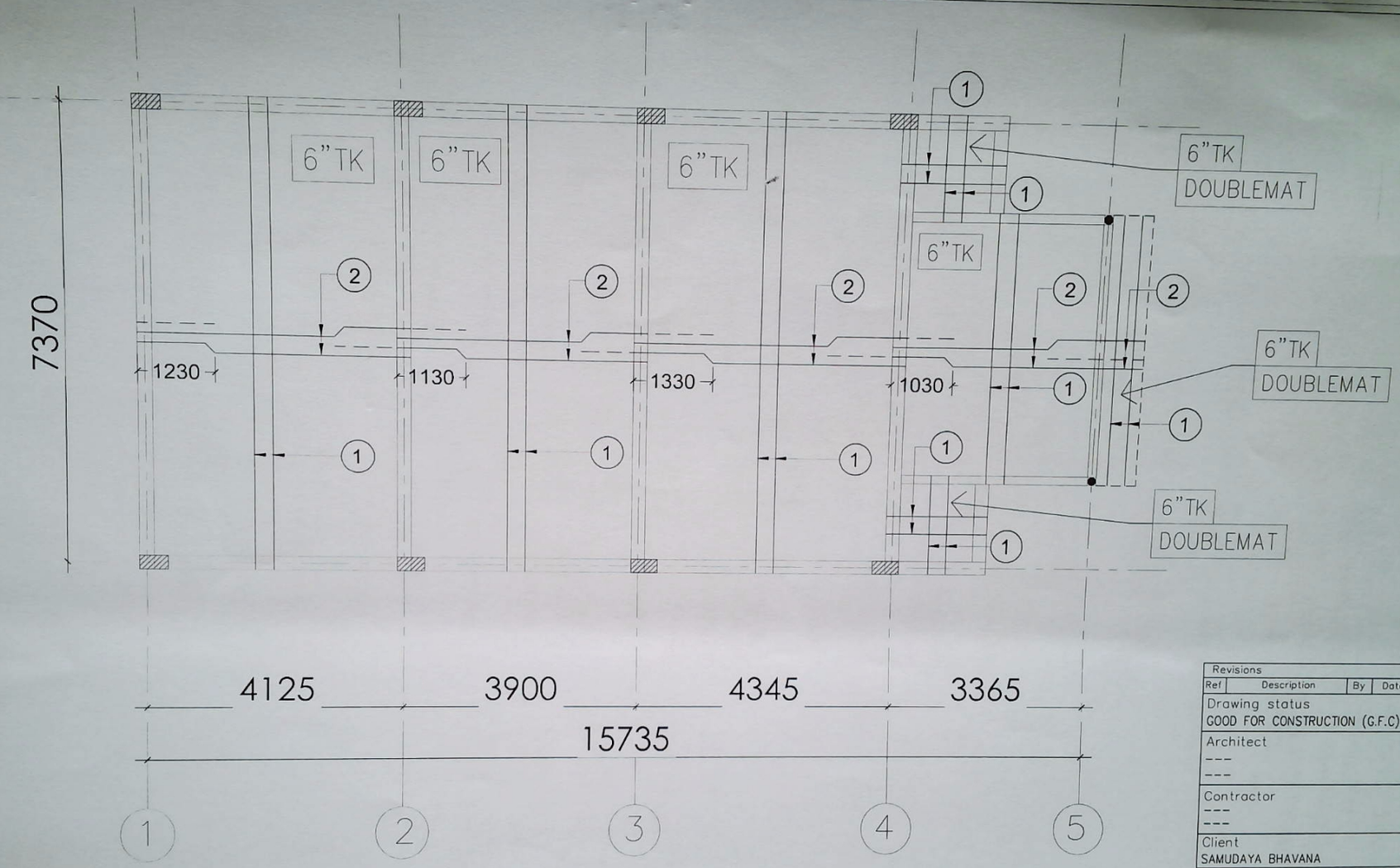

FIRST FLOOR ROOF SLAB LAYOUT&DETAIL

GENERAL NOTES: –

1. All dimensions are in feets&inches.
2. Use M20 (1:1.5:3 mix) grade of concrete unless or otherwise specified.
3. Use Fe500 grade steel.
4. Lap lenght for columns=50ø.
5. Development length for beam=57ø.
6. Read the structural drawings in conjunction with architectural drawings.
7. Clear cover for footing=50mm, column=40mm,beam=25mm,slab=20mm.
8. Do not scale the drawing. Written dimensions to be followed.
9. Any discrepancies in the structural drawings should be brought to notice immediately to the structural engineer and architect before execution.
10. Structural consultant is no where responsible for the failure of structural element due to poor workmanship,poor material quality, improper specification and improper execution at site.
11. This building is designed for G+2 floors.
12. Top beam rod should be lapped at centre of beam,while bottom beam rod should be lapped at L/4 th distance from the face of column.

SLAB REINFORCEMENT DETAIL : –

(1) – 8 mmø @ 150mm c/c

(2) – 10 mmø @ 150mm c/c

Revisions			
Ref	Description	By	Date

Drawing status
GOOD FOR CONSTRUCTION (G.F.C)

Architect

Contractor

Client
SAMUDAYA BHAVANA

Project Title
Proposed conventional building

Drawing Title
First floor roof slab layout&detail

Dsgn	Drwn	Chkd	Appd	Date	Sheet
KV	IV	KV	KV	22.03.25	A3

Drawing No
SD-33J-25-SD-03J-R0

Structural consultant:
BASE & FRAMES
Er.K.VIYASUN, M.E.(Struc),
STRUCTURAL CONSULTANT,
COIMBATORE – 641012.

ಸಹಾಯಕ ಕಾರ್ಯಪಾಲಕ ಅಭಿಯಂತರರು
ಯಲಹಂಕ ಉಪನಗರ ಉಪವಿಭಾಗ

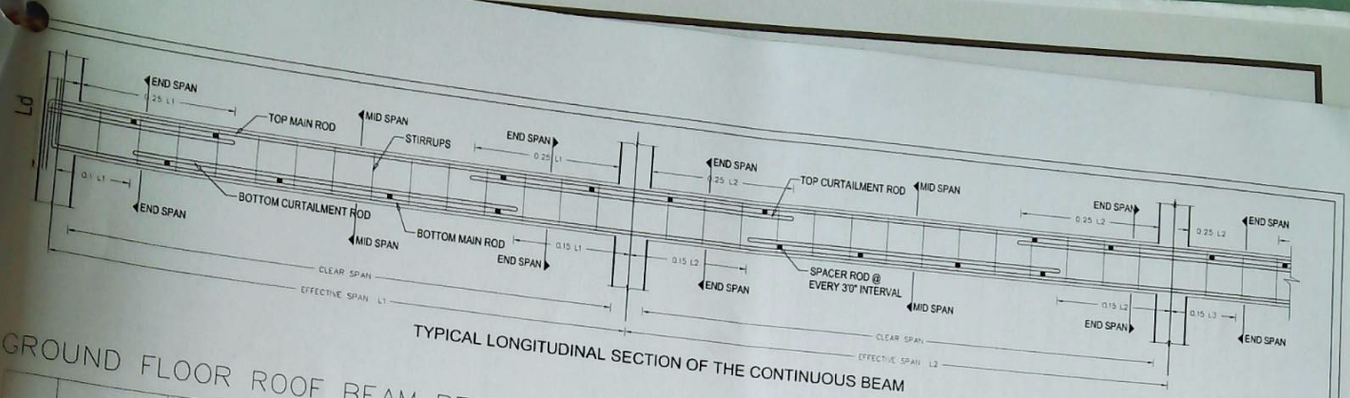

TYPICAL LONGITUDINAL SECTION OF THE CONTINUOUS BEAM

GROUND FLOOR ROOF BEAM REINFORCEMENT DETAIL:

S.No	BEAM SIZE	BEAM DETAIL	
		MID-SECTION	END-SECTION
1	FFB1 230X450	230; 450; #2-16mm(THRU); 8mm@6"C/C; #2-16mm(Extra); #3-16mm(THRU)	230; 450; #2-16mm(THRU); #2-16mm(Extra); 8mm@6"C/C; #3-16mm(THRU)
2	FFB2 230X380	230; 380; #2-16mm(THRU); 8mm@6"C/C; #2-16mm(Extra); #2-12mm(THRU)	230; 380; #2-16mm(THRU); #2-16mm(Extra); 8mm@6"C/C; #2-12mm(THRU)
3	FFB3 230X380	230; 380; #2-16mm(THRU); 8mm@6"C/C; #2-12mm(THRU)	230; 380; #2-16mm(THRU); #2-16mm(Extra); 8mm@6"C/C; #2-12mm(THRU)
4	FFB4 230X380	230; 380; #2-12mm(THRU); 8mm@6"C/C; #2-12mm(THRU)	230; 380; #2-12mm(THRU); 8mm@6"C/C; #2-12mm(THRU)
5	FFB5 150X380	150; 380; #2-16mm(THRU); 8mm@6"C/C; #2-16mm(THRU)	150; 380; #2-16mm(THRU); 8mm@6"C/C; #2-16mm(THRU)

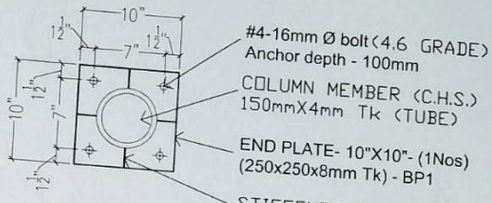

BASE PLATE DETAIL – BP1
(At the first floor slab level)
(Starting of the steel column)

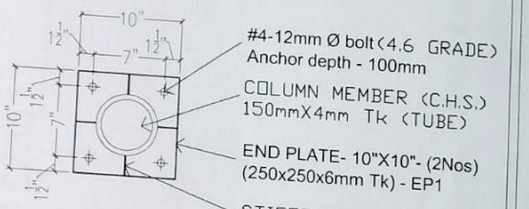

END PLATE DETAIL – EP1
(At the first floor roof beam level)
(End of the steel column)

GENERAL NOTES: –

1. All dimensions are in feets&inches.
2. Use M20 (1:1.5:3 mix) grade of concrete unless or otherwise specified.
3. Use Fe500 grade steel.
4. Lap lenght for columns=50ø.
5. Development length for beam=57ø
6. Read the structural drawings in conjunction with architectural drawings
7. Clear cover for footing=50mm, column=40mm,beam=25mm,slab=20mm
8. Do not scale the drawing. Written dimensions to be followed
9. Any discrepancies in the structural drawings should be brought to notice immediately to the structural engineer and architect before execution.
10. Structural consultant is no where responsible for the failure of structural element due to poor workmanship,poor material quality, improper specification and improper execution at site.
11. This building is designed for G+2 floors
12. Top beam rod should be lapped at centre of beam,while bottom beam rod should be lapped at L/4 th distance from the face of column.

Revisions			
Ref	Description	By	Date
Drawing status: GOOD FOR CONSTRUCTION (G.F.C)			
Architect: --- ---			
Contractor: --- ---			
Client: SAMUDAYA BHAVANA			
Project Title: Proposed conventional building			
Drawing Title: First floor roof beam detail			

Dsgn	Drwn	Chkd	Appd	Date	Sheet
KV	IV	KV	KV	22.03.25	A3

Drawing No: SD-333-25-SD-02-R0

Structural consultant:
BASE & FRAMES
Er.K.VIYASUN, M.E.(Struc),
STRUCTURAL CONSULTANT,
COIMBATORE – 641012.

ಸಹಾಯಕ ಕಾರ್ಯಪಾಲಕ ಅಭಿಯಂತರರು
ಯಲಹಂಕ ಉಪನಗರ ಉಪವಿಭಾಗ
ಜಿ.ಬಿ.ಎ.ಎ. ಬೆಂಗಳೂರು-64

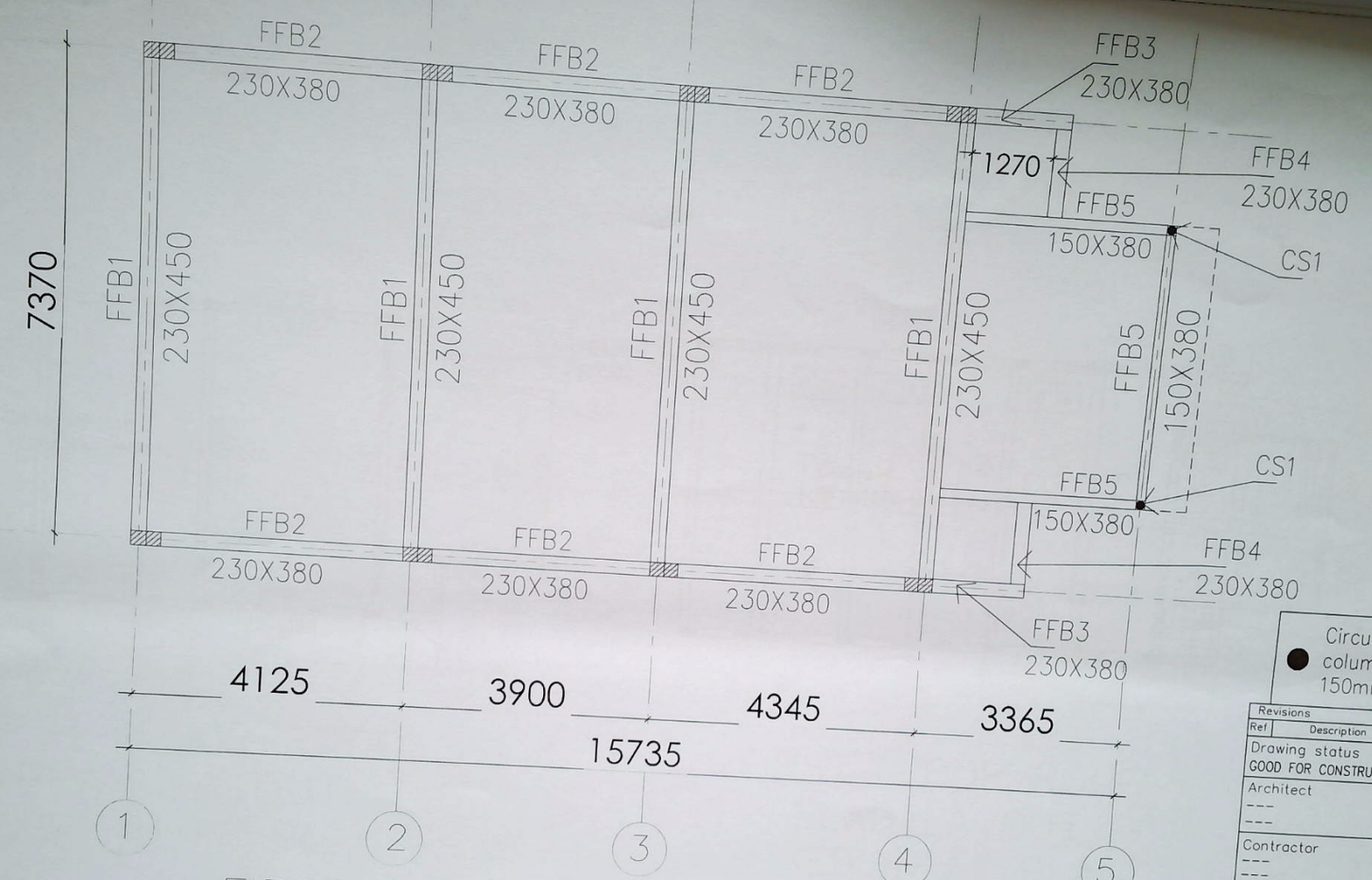

FIRST FLOOR ROOF BEAM LAYOUT

Circular steel column–CS1 150mmx4mmTk

GENERAL NOTES: –

1. All dimensions are in feets&inches.
2. Use M20 (1:1.5:3 mix) grade of concrete unless or otherwise specified.
3. Use Fe500 grade steel.
4. Lap lenght for columns=50ø.
5. Development length for beam=57ø.
6. Read the structural drawings in conjunction with architectural drawings.
7. Clear cover for footing=50mm, column=40mm,beam=25mm,slab=20mm.
8. Do not scale the drawing Written dimensions to be followed.
9. Any discrepancies in the structural drawings should be brought to notice immediately to the structural engineer and architect before execution.
10. Structural consultant is no where responsible for the failure of structural element due to poor workmanship,poor material quality, improper specification and improper execution at site.
11. This building is designed for G+2 floors.
12. Top beam rod should be lapped at centre of beam,while bottom beam rod should be lapped at L/4 th distance from the face of column.

ಸಹಾಯಕ ಕಾರ್ಯಪಾಲಕ ಅಭಿಯಂತರರು
ಯಲಹಂಕ ಉಪನಗರ ಉಪವಿಭಾಗ
ಬಿ.ಬಿ.ಎಂ.ಪಿ. ಬೆಂಗಳೂರು-64

Revisions			
Ref	Description	By	Date

Drawing status
GOOD FOR CONSTRUCTION (G.F.C)

Architect

Contractor

Client
SAMUDAYA BHAVANA

Project Title
Proposed conventional building

Drawing Title
First floor roof beam layout

Dsgn	Drwn	Chkd	Appd	Date	Sheet
KV	IV	KV	KV	22.03.25	A3

Drawing No
SD-333-25-SD-01-R0

Structural consultant:
BASE & FRAMES
Er.K.VIYASUN, M.E.(Struc),
STRUCTURAL CONSULTANT,
COIMBATORE – 641012.

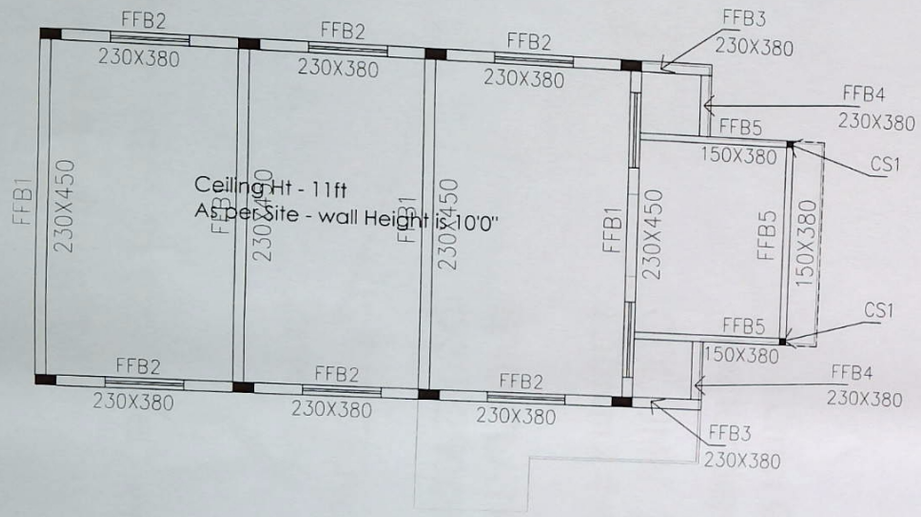

FIRST FLOOR ROOF
BEAM LAYOUT
FIXED IN FF PLAN

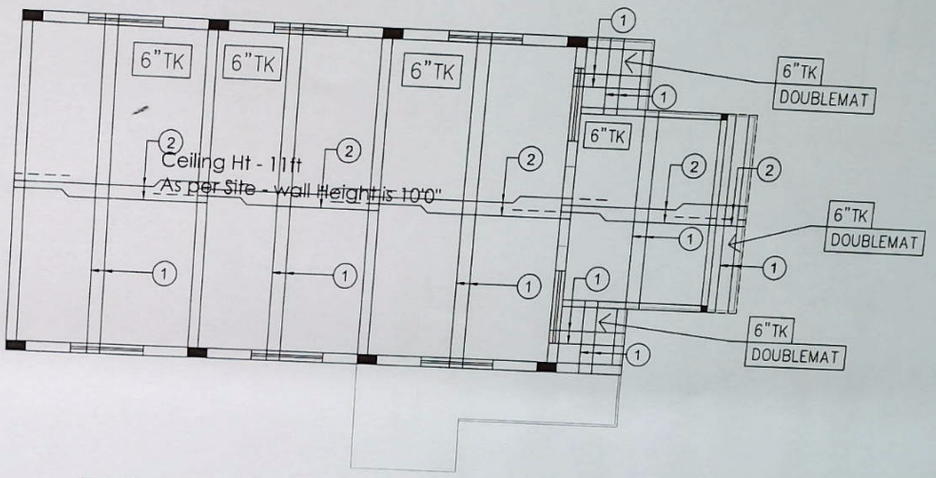

FIRST FLOOR ROOF
SLAB LAYOUT
FIXED IN FF PLAN

ಸಹಾಯಕ ಕಾರ್ಯಪಾಲಕ ಅಭಿಯಂತರರು
ಯಲಹಂಕ ಉಪನಗರ ಉಪವಿಭಾಗ
ಜ.ಜ.ಎಂ.ಪಿ. ಬೆಂಗಳೂರು-64

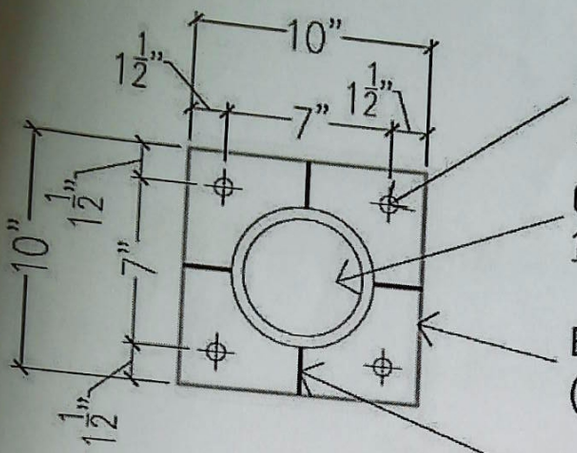

#4-16mm Ø bolt (4.6 GRADE)
Anchor depth - 100mm

COLUMN MEMBER (C.H.S.)
150mmX4mm Tk (TUBE)

END PLATE- 10"X10"- (1Nos)
(250x250x8mm Tk) - BP1

STIFFENER PLATE
3mm Tk

BASE PLATE DETAIL – BP1

(At the first floor slab level)
(Starting of the steel column)

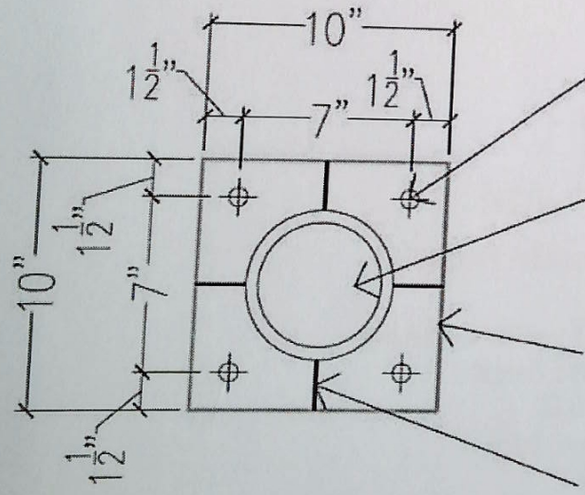

#4-12mm Ø bolt (4.6 GRADE)
Anchor depth - 100mm

COLUMN MEMBER (C.H.S.)
150mmX4mm Tk (TUBE)

END PLATE- 10"X10"- (2Nos)
(250x250x6mm Tk) - EP1

STIFFENER PLATE
3mm Tk

END PLATE DETAIL – EP1

(At the first floor roof beam level)
(End of the steel column)

ಸಹಾಯಕ ಕಾರ್ಯಪಾಲಕ ಅಭಿಯಂತರರು
ಯಲಹಂಕ ಉಪನಗರ ಉಪವಿಭಾಗ
ಬಿ.ಡಿ.ಎ.ಐ.ಡಿ. ಬೆಂಗಳೂರು-64

Bruhat Bangalore Mahanagara Palike

Asst Executive Engineer

Yelahanka Sub Division

QUALITY REPORT

(1st & Final Bill)

NAME OF THE WORK: "Repairs to Existing Samudhaya Bhavan at Basavalingappa Nagar in Ward No.03."

M/s. Team for You

Project Management and Services

Registered Office: #102, 1st Main Road, 3rd Cross,
Magadi Main Road, Kottigepalya,
Bangalore-560091.
E mail: team4upms@gmail.com
Ph: 7829676869

For Team For You

Project Management Services

QC Abstract

Name of the work: **Repairs to Existing Samudhaya Bhavan at Basavalingappa Nagar in Ward No.03'**

Sl. No	Particulars of the Tests	Frequency of Tests	Tests Required	Tests Carried Out
I	**Cement**		**53 Grade**	
1	Standard Consistency test	one test	1	1
2	Fineness test by dry sieving	one test	1	1
3	Fineness By Air Permeability method	one test	1	1
4	Density	one test	1	1
5	Intial setting time	one test	1	1
6	Final setting time	one test	1	1
7	Soundness test(Le Chatelier's Method)	one test	1	1
8	Compressive strength test	one test	1	1
i	3-days			
ii	7-days	one test	1	1
iii	28-days	one test	1	1
		one test	1	1
II	**Fine Aggregates**			
1	Sieve Analysis	one test	1	1
2	Water Absorbtion	one test	1	1
3	Specific Gravity	one test	1	1
4	Material finer than 75 micron	one test	1	1
III	**Coarse aggregates-20mm down size**			
1	Sieve Analysis	one test	1	1
2	Flakiness Index	one test	1	1
3	Elongation Index	one test	1	1
4	Specific Gravity	one test	1	1
5	Bulk density(Loose)	one test	1	1
6	Bulk density(compacted)	one test	1	1
7	Water Absorbtion	one test	1	1
8	Crushing value	one test	1	1
9	Impact test	one test	1	1

IV	**Coarse aggregates-40mm down size**			
1	Sieve Analysis	one test	1	1
2	Flakiness Index	one test	1	1
3	Elongation Index	one test	1	1
4	Specific Gravity	one test	1	1
5	Bulk density(Loose)	one test	1	1
6	Bulk density(compacted)	one test	1	1
7	Water Absorbtion	one test	1	1

CONSULTANT CONTRACTOR ASSISTANT ENGINEER ASSISTANT EXECUTIVE ENGINEER EXECUTIVE ENGINEER

ಸಹಾಯಕ ಕಾರ್ಯನಿರ್ವಾಹಕ ಅಭಿಯಂತರರು
ಯಲಹಂಕ ಉಪವಿಭಾಗ ಉಪವಿಭಾಗ
ಜ.ಜ.ಎಂ.ಕೆ. ಬೆಂಗಳೂರು-64

TEAM FOR YOU

PROJECT MANAGEMENT SERVICES &TESTING DIVISION

NABL Accredited As Per ISO/IEC : 17025:2017

ISO 9001 : 2015 Certified Company

Test Report

Pysical Properties of Cement

Project Name	Repairs to Existing Samudhaya Bhavan at Basavalingappa Nagar in Ward No.03'
Client	Assistant Executive Engineer-Yelahanka Sub Division
Job No	T4U/BBMP/EE/PS/Pkg-03/2022-23/QR-03
Contractor	Sri Prashanth M (Maradis Enterprises)
Location	Laboratory (Sample collected @ stack area)
Sample condition	Satisfactory
Material	Cement 53 grade
Sample No	1
Date of test	12-Mar-2025
Temperature	28 degree C
Humidity	67%

Compressive strength

Sl No	Physical properties	Results	Requirement as per IS 12269:2013	Reference
1	3 days	28.0 N/mm2	Not less than 27 N/mm2	IS 4031-Part6 Determination of of compressive Strength, Clause 6
2	7days	39.5N/mm2	Not less than 37 N/mm2	IS 4031-Part6 Determination of of compressive Strength, Clause 6
3	28 days	58.0 N/mm2	Not less than 53 N/mm2	IS 4031-Part6 Determination of of compressive Strength, Clause 6

For Team For You

Authorised Signature

ಸಹಾಯಕ ಕಾರ್ಯನಿರ್ವಾಹಕ ಅಭಿಯಂತರರು
ಯಲಹಂಕ ಉಪನಗರ ಉಪವಿಭಾಗ
ಬಿ.ಬಿ.ಎಂ.ಪಿ. ಬೆಂಗಳೂರು-64

102, 3rd Cross, 1st Main, Kottigepalya, Magadi Main Road, Bangalore - 560 091.

+91 7829676869 +91 9916889374 team4upms@gmail.com,info@team4upms.com

TEAM FOR YOU

PROJECT MANAGEMENT SERVICES &TESTING DIVISION

NABL Accredited As Per ISO/IEC : 17025:2017

ISO 9001 : 2015 Certified Company

Test Report

Pysical Properties of Cement

Project Name	Repairs to Existing Samudhaya Bhavan at Basavalingappa Nagar in Ward No.03'
Client	Assistant Executive Engineer-Yelahanka Sub Division
Job No	TFU/BBMP/QC/EE/YLK/2024-25/QR-02
Contractor	Sri Prashanth M (Maradis Enterprises)
Location	Sample collected at Site
Sample condition	Satisfactory
Material	Cement 53 grade
Sample No	1
Date of test	12-Mar-2025
Temperature	24 degree C
Humidity	65%

Sl No	Physical properties	Results	Requirement as per IS 12269:2013	Reference
1	Fineness By Dry Sieving(%)	1.56	-	IS 4031-Part1 Determination of finess by Dry Sieving,Clause 4.4
2	Fineness By Air Permeability method(m2 /kg,Min)	296.7	225m2/kg,Min	IS 4031-Part2 Determination of finess by Blaine Air Permeability Method,Clause 5
3	Density(gm/cc)	3.12	-	IS 4031-Part 11 Determination of Density, Caluse6
4	Standard Consistency(%)	0.28	Not Specified	IS 4031-Part4 Determination of Consistency of standard cement paste, Caluse 5
5	Intial Setting Time	175 minutes	Not less than 30 minuties	IS 4031-Part 5 Determination of Intial & final Setting time, Caluse 5
6	Final Setting Time	268 minutes	Not more than 600 minuties	IS 4031-Part 5 Determination of Intial & final Setting time, Caluse 5
7	Soundness(Le Chatelier's Method)	2.8mm	Not more than 10mm	IS 4031-Part3 Determination of soundness by Le Chatelier's Method,Clause 6

For Team For You

Authorised Signature

ಸಹಾಯಕ ಕಾರ್ಯನಿರ್ವಾಹಕ ಅಭಿಯಂತರರು
ಯಲಹಂಕ ಉಪನಗರ ಉಪವಿಭಾಗ
ಬ.ಬ.ಎಂ.ಪಿ. ಬೆಂಗಳೂರು-64

102, 3rd Cross, 1st Main, Kottigepalya, Magadi Main Road, Bangalore - 560 091.

+91 7829676869 +91 9916889374 team4upms@gmail.com,info@team4upms.com

TEAM FOR YOU

PROJECT MANAGEMENT SERVICES &TESTING DIVISION

NABL Accredited As Per ISO/IEC : 17025:2017

ISO 9001 : 2015 Certified Company

Test Report
Sieve Analysis

Project Name	Repairs to Existing Samudhaya Bhavan at Basavalingappa Nagar in Ward No.03'
Client	Assistant Executive Engineer-Yelahanka Sub Division
Job No	TFU/BBMP/QC/EE/YLK/2024-25/QR-02
Sample condition	Satisfactory
Contractor	Sri Prashanth M (Maradis Enterprises)
Test Method	IS : 2386 (Part - 1) 1963 & Specification for Road & Bridge Works, MORTH, Rev. V. & IS 1542 (1992): sand for plaster
Location	Sample collected at Site
Material	Fine Aggregates
Sample No	1
Date	12-Mar-2025

Weight of Sample(gram): 1000

Sl No.	IS Sieve Size	Weight retained (gms)	Cummulative Weight retained (gms)	% Cummulative Weight retained	% Passing	Requirement as per IS 1542 (1992): sand for plaster
						Grading
1	10mm	0.0	0.00	0.00	100.00	100
2	4.75 mm	18.0	18.00	1.80	98.20	95-100
3	2.36 mm	14.0	32.00	3.20	96.80	95-100
4	1.18 mm	19.0	51.00	5.10	94.90	90-100
5	600 µ	70.0	121.00	12.10	87.90	80-100
6	300 µ	571.0	692.00	69.20	30.80	20-65
7	150 µ	241.0	933.00	93.30	6.70	0-15
8	Pan	67.0	1000.00	100.00	0.00	-

For Team For You

Authorised Signature

ಸಹಾಯಕ ಕಾರ್ಯನಿರ್ವಾಹಕ ಅಭಿಯಂತರರು
ಯಲಹಂಕ ಉಪನಗರ ಉಪವಿಭಾಗ
ಜ.ಜ.ಎಂ.ಕೆ. ಬೆಂಗಳೂರು-64

102, 3rd Cross, 1st Main, Kottigepalya, Magadi Main Road, Bangalore - 560 091.

+91 7829676869 +91 9916889374 team4upms@gmail.com,info@team4upms.com

TEAM FOR YOU

PROJECT MANAGEMENT SERVICES &TESTING DIVISION

NABL Accredited As Per ISO/IEC : 17025:2017

ISO 9001 : 2015 Certified Company

Test Report
Sieve Analysis

Project Name	Repairs to Existing Samudhaya Bhavan at Basavalingappa Nagar in Ward No.03'
Client	Assistant Executive Engineer-Yelahanka Sub Division
Job No	TFU/BBMP/QC/EE/YLK/2024-25/QR-02
Sample condition	Satisfactory
Contractor	Sri Prashanth M (Maradis Enterprises)
Test Method	IS : 2386 (Part - 1) 1963 & Specification for Road & Bridge Works, MORT&H, Rev. V. & IS 2116 (1980): Sand for masonry mortars
Location	Sample collected at Site
Material	Fine Aggregates
Sample No	1
Date	12-Mar-2025

Weight of Sample(gram): 1000

Sl No.	IS Sieve Size	Weight retained (gms)	Cummulative Weight retained (gms)	% Cummulative Weight retained	% Passing	Requirement as per IS 2116 (1980): Sand for masonry mortars
						Grading
1	4.75 mm	0.00	0.00	0	100	100
2	2.36 mm	27.00	27.00	2.70	97.3	90-100
3	1.18 mm	200.00	227.00	22.70	77.3	70-100
4	600 µ	260.00	487.00	48.70	51.3	40-100
5	300 µ	206.00	693.00	69.30	30.7	5-70
6	150 µ	205.00	898.00	89.80	10.2	0-15
7	Pan	102.00	1000.00	100	0	0

For Team For You

Authorised Signature

ಸಹಾಯಕ ಕಾರ್ಯಪಾಲಕ ಅಭಿಯಂತರರು
ಯಲಹಂಕ ಉಪನಗರ ಉಪವಿಭಾಗ
ಬ.ಬ.ಎಂ.ಪಿ. ಬೆಂಗಳೂರು-64

102, 3rd Cross, 1st Main, Kottigepalya, Magadi Main Road, Bangalore - 560 091.

+91 7829676869 +91 9916889374 team4upms@gmail.com,info@team4upms.com

TEAM FOR YOU

PROJECT MANAGEMENT SERVICES &TESTING DIVISION

NABL Accredited As Per ISO/IEC : 17025:2017

ISO 9001 : 2015 Certified Company

Test Report
Sieve Analysis

Project Name	Repairs to Existing Samudhaya Bhavan at Basavalingappa Nagar in Ward No.03'
Client	Assistant Executive Engineer-Yelahanka Sub Division
Job No	TFU/BBMP/QC/EE/YLK/2024-25/QR-02
Sample condition	Satisfactory
Contractor	Sri Prashanth M (Maradis Enterprises)
Test Method	IS : 2386 (Part - 1) 1963 & Specification for Road & Bridge Works, MORT&H, Rev. V. & IS 383:2016
Location	Sample collected at Site
Material	Fine Aggregates
Sample No	1
Date	12-Mar-2025

Weight of Sample(gram): 1000

Sl No.	IS Sieve Size	Weight retained (gms)	Cummulative Weight retained (gms)	% Cummulative Weight retained	% Passing	Requirement as per IS 383:2016
						Grading Zone-II
1	10 mm	0.00	0.00	0.00	100	100
2	4.75 mm	27.00	27.00	2.70	97.30	90-100
3	2.36 mm	58.00	85.00	8.50	91.50	75-100
4	1.18 mm	248.00	333.00	33.30	66.70	55-90
5	600 µ	206.00	539.00	53.90	46.10	35-59
6	300 µ	215.00	754.00	75.40	24.60	8-30
7	150 µ	196.00	950.00	95.00	5.00	0-10
8	Pan	50.00	1000.00	100.00	0.00	-

For Team For You

Authorised Signature

ಸಹಾಯಕ ಕಾರ್ಯನಿರ್ವಾಹಕ ಅಭಿಯಂತರರು
ಯಲಹಂಕ ಉಪನಗರ ಉಪವಿಭಾಗ
ಬ.ಜ.ಎಂ.ಪಿ. ಬೆಂಗಳೂರು-64

102, 3rd Cross, 1st Main, Kottigepalya, Magadi Main Road, Bangalore - 560 091.

+91 7829676869 +91 9916889374 team4upms@gmail.com,info@team4upms.com

TEAM FOR YOU

PROJECT MANAGEMENT SERVICES &TESTING DIVISION

NABL Accredited As Per ISO/IEC : 17025:2017

ISO 9001 : 2015 Certified Company

Test Report
Sieve Analysis

Project Name	Repairs to Existing Samudhaya Bhavan at Basavalingappa Nagar in Ward No.03'
Client	Assistant Executive Engineer-Yelahanka Sub Division
Job No	TFU/BBMP/QC/EE/YLK/2024-25/QR-02
Sample condition	Satisfactory
Contractor	Sri Prashanth M (Maradis Enterprises)
Test Method	IS : 2386 (Part - 1) 1963 & Specification for Road & Bridge Works, MORT&H, Rev. V. & IS 383:2016
Location	Laboratory (Sample collected @ stack area)
Material	Coarse Agregate-20mm down size
Sample No	1
Date	12-Mar-2025

Weight of Sample(gram): 5000

Sl No.	IS Sieve Size	Weight retained (gms)	Cummulative Weight retained (gms)	% Cummulative Weight retained	% Passing	Requirement as per IS 383-2016
						Grading
1	40 mm	0.00	0.00	0.00	100.00	100
2	20 mm	231.00	231.00	4.62	95.38	90-100
3	10 mm	2637.00	2868.00	57.34	42.66	25-55
4	4.75 mm	1789.00	4657.00	93.10	6.90	0-10
5	pan	345.00	5002.00	100.00	0.00	-

For Team For You

Authorised Signature

ಸಹಾಯಕ ಕಾರ್ಯನಿರ್ವಾಹಕ ಅಭಿಯಂತರರು
ಯಲಹಂಕ ಉಪನಗರ ಉಪವಿಭಾಗ
ಜ.ಜ.ಎಂ.ಕೆ. ಬೆಂಗಳೂರು-64

102, 3rd Cross, 1st Main, Kottigepalya, Magadi Main Road, Bangalore - 560 091.

+91 7829676869 +91 9916889374 team4upms@gmail.com,info@team4upms.com

TEAM FOR YOU

PROJECT MANAGEMENT SERVICES &TESTING DIVISION

NABL Accredited As Per ISO/IEC : 17025:2017

ISO 9001 : 2015 Certified Company

Test Report
Sieve Analysis

Project Name	Repairs to Existing Samudhaya Bhavan at Basavalingappa Nagar in Ward No.03'
Client	Assistant Executive Engineer-Yelahanka Sub Division
Job No	TFU/BBMP/QC/EE/YLK/2024-25/QR-02
Sample condition	Satisfactory
Contractor	Sri Prashanth M (Maradis Enterprises)
Test Method	IS : 2386 (Part - 1) 1963 & Specification for Road & Bridge Works, MORTH, Rev. V. & IS 383:2016
Location	Sample collected at Site
Material	Coarse Agregate-40mm down size
Sample No	1
Date	12-Mar-2025

Weight of Sample(gram): 15000

Sl No.	IS Sieve Size	Weight retained (gms)	Cummulative Weight retained (gms)	% Cummulative Weight retained	% Passing	Requirement as per IS 383-2016
						Grading
1	80 mm	0.00	0.00	0.00	100.00	100.0
2	40 mm	217.00	217.00	1.45	98.55	90-100
3	20 mm	7226.00	7443.00	49.62	50.38	30-70
4	10 mm	4110.00	11553.00	77.02	22.98	10-35
5	4.75 mm	2950.00	14503.00	96.69	3.31	0-5
6	pan	497.00	15000.00	100.00	0.00	-

For Team For You

Authorised Signature

ಸಹಾಯಕ ಕಾರ್ಯಪಾಲಕ ಅಭಿಯಂತರರು
ಯಲಹಂಕ ಉಪನಗರ ಉಪವಿಭಾಗ
ಬಿ.ಬಿ.ಎಂ.ಪಿ. ಬೆಂಗಳೂರು-64

102, 3rd Cross, 1st Main, Kottigepalya, Magadi Main Road, Bangalore - 560 091.

+91 7829676869 +91 9916889374 team4upms@gmail.com,info@team4upms.com

TEAM FOR YOU

PROJECT MANAGEMENT SERVICES &TESTING DIVISION

NABL Accredited As Per ISO/IEC : 17025:2017

ISO 9001 : 2015 Certified Company

Test Report on Fine Aggregates

Project Name	Repairs to Existing Samudhaya Bhavan at Basavalingappa Nagar in Ward No.03'
Client	Assistant Executive Engineer-Yelahanka Sub Division
Job No	TFU/BBMP/QC/EE/YLK/2024-25/QR-02
Sample condition	Satisfactory
Contractor	Sri Prashanth M (Maradis Enterprises)
Test Method	IS : 2386 (Part - 1) 1963 & Specification for Road & Bridge Works, MORTH, Rev. V. & IS 383:2016
Location	Sample collected at Site
Material	Fine Aggregates
Sample No	1
Date	12-Mar-2025

Sl No	Physical properties	Results	Requirement as per IS 383-2016
1	Water absorbtion(%)	1.75	-
2	Specific gravity	2.57	-
3	Material finer than 75 micron(%)	6.5	Uncrushed Fine Aggregate Max 3% crushed Fine Aggregate Max 15% Mixed Fine Aggregate Max 12% Manufactured Fine Aggregate Max 10%

For Team For You

Authorised Signature

ಸಹಾಯಕ ಕಾರ್ಯಪಾಲಕ ಅಭಿಯಂತರರು
ಯಲಹಂಕ ಉಪನಗರ ಉಪವಿಭಾಗ
ಬ.ಬ.ಎಂ.ಪಿ. ಬೆಂಗಳೂರು-64

102, 3rd Cross, 1st Main, Kottigepalya, Magadi Main Road, Bangalore - 560 091.

+91 7829676869 +91 9916889374 team4upms@gmail.com,info@team4upms.com

TEAM FOR YOU

PROJECT MANAGEMENT SERVICES &TESTING DIVISION

NABL Accredited As Per ISO/IEC : 17025:2017

ISO 9001 : 2015 Certified Company

Test Report on Coarse Aggregates

Project Name	Repairs to Existing Samudhaya Bhavan at Basavalingappa Nagar in Ward No.03'
Client	Assistant Executive Engineer-Yelahanka Sub Division
Job No	TFU/BBMP/QC/EE/YLK/2024-25/QR-02
Sample condition	Satisfactory
Contractor	Sri Prashanth M (Maradis Enterprises)
Test Method	IS : 2386 (Part - 1) 1963 & Specification for Road & Bridge Works, MORT&H, Rev. V. & IS 383:2016
Location	Laboratory (Sample collected @ stack area)
Material	Coarse Agregate-40mm down size
Sample No	1
Date	12-Mar-2025

Sl No	Physical properties	Results	Requirement as per IS 383-2016
1	Flakiness Index (%)	12.20	Combined Flakiness & Elongation Index shall not exceed 40% for crushed and uncrushed Aggregate
2	Elongation Index (%)	11.50	
3	Specific gravity	2.66	-
4	Bulk density(Loose)(Kg/l)	1.52	-
5	Bulk density(Compacted)(Kg/l)	1.56	-
6	Water Absorbtion(%)	0.22	-

For Team For You

Authorised Signature

ಸಹಾಯಕ ಕಾರ್ಯಪಾಲಕ ಅಭಿಯಂತರರು
ಯಲಹಂಕ ಉಪನಗರ ಉಪವಿಭಾಗ
ಜ.ಪ.ಎಂ.ಕ. ಬೆಂಗಳೂರು-64

102, 3rd Cross, 1st Main, Kottigepalya, Magadi Main Road, Bangalore - 560 091.

+91 7829676869 +91 9916889374 team4upms@gmail.com,info@team4upms.com

For Team For You

Project Management & Consultancy Services

Summary of Frequencies of Field Tests and Lab Tests Conducted

Name of the work: **Repairs to Existing Samudhaya Bhavan at Basavalingappa Nagar in Ward No.03'**

Job No: **TFU/BBMP/QC/EE/YLK/2024-25/QR-02**

Contractor **Sri Prashanth M (Maradis Enterprises)**

Item No	Particulars of the Tests	Quantity Cum	Frequency of Tests	Tests Required	Tests Carried Out
10	**Concrete (1:3:6) with 20mm Aggregates**	27.10	1 to 5cum=1 sample 6 to 15 cum=2 sample 16 to 30cum=3 smaple 31 to 50cum= 4 sample 51cum and above= one additonal sample for every additional 50 cum or part therof	3	3
	Compressive strength test				
	7-days				
	28-days				

Note: Frequency of tests as per Specifications MORT&H, V Revision, Section 900.

CONSULTANT

CONTRACTOR

ASSISTANT ENGINEER

ASSISTANT EXECUTIVE

TEAM FOR YOU

PROJECT MANAGEMENT SERVICES &TESTING DIVISION

NABL Accredited As Per ISO/IEC : 17025:2017

ISO 9001 : 2015 Certified Company

Test Report
Concrete Compresive strength

Project Name	Repairs to Existing Samudhaya Bhavan at Basavalingappa Nagar in Ward No.03'
Client	Assistant Executive Engineer-Yelahanka Sub Division
Job No	TFU/BBMP/QC/EE/YLK/2024-25/QR-02
Sample condtion	Satisfactory
Contractor	Sri Prashanth M (Maradis Enterprises)
Test Method	IS : 4031 (part 6)-1988 & Specification for Road & Bridge Works, MORT&H, Rev. V.
Location	laboratory (sample Collected @ Samudhaya Bhavan at Basavalingappa Nagar)
Material	Concrete (M10) (1:3:6)
Sample No	1
Cube Casted Date	23-May-2025
Tested Date	30-May-2025

Cube	Concrete Grade	Age at Test (Days)	Weight (kg)	Dimension (LxWxH)	Density (kg/m^3)	Max. Load (KN)	Area (m^2)	Compressive Strength (N/mm^2)	Avg. Sample Strength
1	10	7	7.23	150*150*150	2142.22	201.00	0.0225	8.93	8.98
2	10	7	7.34	150*150*150	2174.81	203.00	0.0225	9.02	
3	10	7	7.41	150*150*150	2195.56	202.00	0.0225	8.98	

Results: 7-days Compressive strength of Concrete is 8.98 N/mm2

For Team For You

Authorised Signature

ಸಹಾಯಕ ಕಾರ್ಯಪಾಲಕ ಅಭಿಯಂತರರು
ಯಲಹಂಕ ಉಪನಗರ ಉಪವಿಭಾಗ
ಬಿ.ಬಿ.ಎಂ.ಪಿ. ಬೆಂಗಳೂರು-64

102, 3rd Cross, 1st Main, Kottigepalya, Magadi Main Road, Bangalore - 560 091.

+91 7829676869 +91 9916889374 team4upms@gmail.com,info@team4upms.com

TEAM FOR YOU

PROJECT MANAGEMENT SERVICES &TESTING DIVISION

NABL Accredited As Per ISO/IEC : 17025:2017
ISO 9001 : 2015 Certified Company

Test Report
Concrete Compresive strength

Project Name	Repairs to Existing Samudhaya Bhavan at Basavalingappa Nagar in Ward No.03'
Client	Assistant Executive Engineer-Yelahanka Sub Division
Job No	TFU/BBMP/QC/EE/YLK/2024-25/QR-02
Sample condtion	Satisfactory
Contractor	Sri Prashanth M (Maradis Enterprises)
Test Method	IS : 4031 (part 6)-1988 & Specification for Road & Bridge Works, MORT&H, Rev. V.
Location	laboratory (sample Collected @ Samudhaya Bhavan at Basavalingappa Nagar)
Material	Concrete (M10) (1:3:6)
Sample No	2
Cube Casted Date	23-May-2025
Tested Date	30-May-2025

Cube	Concrete Grade	Age at Test (Days)	Weight (kg)	Dimension (LxWxH)	Density (kg/m^3)	Max. Load (KN)	Area (m^2)	Compressive Strength (N/mm^2)	Avg. Sample Strength
1	10	7	7.43	150*150*150	2201.48	200	0.0225	8.89	8.93
2	10	7	7.32	150*150*150	2168.89	201	0.0225	8.93	
3	10	7	7.26	150*150*150	2151.11	202	0.0225	8.98	

Results: 7-days Compressive strength of Concrete is 8.93 N/mm2

For Team For You

Authorised Signature

ಸಹಾಯಕ ಕಾರ್ಯನಿರ್ವಾಹಕ ಅಭಿಯಂತರರು
ಯಲಹಂಕ ಉಪನಗರ ಉಪವಿಭಾಗ
ಜ.ಜ.ಎಂ.ಪಿ. ಬೆಂಗಳೂರು-64

102, 3rd Cross, 1st Main, Kottigepalya, Magadi Main Road, Bangalore - 560 091.
+91 7829676869 +91 9916889374 team4upms@gmail.com,info@team4upms.com

TEAM FOR YOU

PROJECT MANAGEMENT SERVICES &TESTING DIVISION

NABL Accredited As Per ISO/IEC : 17025:2017

ISO 9001 : 2015 Certified Company

Test Report
Concrete Compresive strength

Project Name	Repairs to Existing Samudhaya Bhavan at Basavalingappa Nagar in Ward No.03'
Client	Assistant Executive Engineer-Yelahanka Sub Division
Job No	TFU/BBMP/QC/EE/YLK/2024-25/QR-02
Sample condtion	Satisfactory
Contractor	Sri Prashanth M (Maradis Enterprises)
Test Method	IS : 4031 (part 6)-1988 & Specification for Road & Bridge Works, MORT&H, Rev. V.
Location	laboratory (sample Collected @ Samudhaya Bhavan at Basavalingappa Nagar)
Material	Concrete (M10) (1:3:6)
Sample No	3
Cube Casted Date	23-May-2025
Tested Date	30-May-2025

Cube	Concrete Grade	Age at Test (Days)	Weight (kg)	Dimension (LxWxH)	Density (kg/m^3)	Max. Load (KN)	Area (m^2)	Compressive Strength (N/mm^2)	Avg. Sample Strength
1	10	7	7.1	150*150*150	2109.6	199.0	0.0225	8.84	8.89
2	10	7	7.2	150*150*150	2142.2	201.0	0.0225	8.93	
3	10	7	7.3	150*150*150	2163.0	200.0	0.0225	8.89	

Results: 7-days Compressive strength of Concrete is 8.89 N/mm2

For Team For You

Authorised Signature

ಸಹಾಯಕ ಕಾರ್ಯಪಾಲಕ ಅಭಿಯಂತರರು
ಯಲಹಂಕ ಉಪನಗರ ಉಪವಿಭಾಗ
ಬಿ.ಬಿ.ಎಂ.ಪಿ. ಬೆಂಗಳೂರು-64

102, 3rd Cross, 1st Main, Kottigepalya, Magadi Main Road, Bangalore - 560 091.

+91 7829676869 +91 9916889374 team4upms@gmail.com,info@team4upms.com

TEAM FOR YOU

PROJECT MANAGEMENT SERVICES &TESTING DIVISION

NABL Accredited As Per ISO/IEC : 17025:2017

ISO 9001 : 2015 Certified Company

Test Report

Concrete Compresive strength

Project Name	Repairs to Existing Samudhaya Bhavan at Basavalingappa Nagar in Ward No.03'
Client	Assistant Executive Engineer-Yelahanka Sub Division
Job No	TFU/BBMP/QC/EE/YLK/2024-25/QR-02
Sample condtion	Satisfactory
Contractor	Sri Prashanth M (Maradis Enterprises)
Test Method	IS : 4031 (part 6)-1988 & Specification for Road & Bridge Works, MORT&H, Rev. V.
Location	laboratory (sample Collected @ Samudhaya Bhavan at Basavalingappa Nagar)
Material	Concrete (M10) (1:3:6)
Sample No	1
Cube Casted Date	23-May-2025
Tested Date	20-Jun-2025

Cube	Concrete Grade	Age at Test (Days)	Weight (kg)	Dimension (LxWxH)	Density (kg/m^3)	Max. Load (KN)	Area (m^2)	Compressive Strength (N/mm^2)	Avg. Sample Strength
1	10	28	6.25	150*150*150	1851.85	254	0.0225	11.29	11.51
2	10	28	6.31	150*150*150	1869.63	259	0.0225	11.51	
3	10	28	6.37	150*150*150	1887.41	264	0.0225	11.73	

Results: 28-days Compressive strength of Concrete is 11.51 N/mm2

For Team For You

Authorised Signature

ಸಹಾಯಕ ಕಾರ್ಯಪಾಲಕ ಅಭಿಯಂತರರು
ಯಲಹಂಕ ಉಪನಗರ ಉಪವಿಭಾಗ
ಬಿ.ಬಿ.ಎಂ.ಪಿ. ಬೆಂಗಳೂರು-64

102, 3rd Cross, 1st Main, Kottigepalya, Magadi Main Road, Bangalore - 560 091.

+91 7829676869 +91 9916889374 team4upms@gmail.com,info@team4upms.com

TEAM FOR YOU

PROJECT MANAGEMENT SERVICES &TESTING DIVISION

NABL Accredited As Per ISO/IEC : 17025:2017

ISO 9001 : 2015 Certified Company

Test Report
Concrete Compresive strength

Project Name	Repairs to Existing Samudhaya Bhavan at Basavalingappa Nagar in Ward No.03'
Client	Assistant Executive Engineer-Yelahanka Sub Division
Job No	TFU/BBMP/QC/EE/YLK/2024-25/QR-02
Sample condtion	Satisfactory
Contractor	Sri Prashanth M (Maradis Enterprises)
Test Method	IS : 4031 (part 6)-1988 & Specification for Road & Bridge Works, MORT&H, Rev. V.
Location	laboratory (sample Collected @ Samudhaya Bhavan at Basavalingappa Nagar)
Material	Concrete (M10) (1:3:6)
Sample No	2
Cube Casted Date	23-May-2025
Tested Date	20-Jun-2025

Cube	Concrete Grade	Age at Test (Days)	Weight (kg)	Dimension (LxWxH)	Density (kg/m^3)	Max. Load (KN)	Area (m^2)	Compressive Strength (N/mm^2)	Avg. Sample Strength
1	10	28	6.39	150*150*150	1893.33	270	0.0225	12.00	12.33
2	10	28	6.44	150*150*150	1908.15	277	0.0225	12.31	
3	10	28	6.49	150*150*150	1922.96	285	0.0225	12.67	

Results: 28-days Compressive strength of Concrete is 12.33 N/mm2

For Team For You

Authorised Signature

ಸಹಾಯಕ ಕಾರ್ಯಪಾಲಕ ಅಭಿಯಂತರರು
ಯಲಹಂಕ ಉಪನಗರ ಉಪವಿಭಾಗ
ಬಿ.ಬಿ.ಎಂ.ಪಿ. ಬೆಂಗಳೂರು-64

102, 3rd Cross, 1st Main, Kottigepalya, Magadi Main Road, Bangalore - 560 091.

+91 7829676869 +91 9916889374 team4upms@gmail.com,info@team4upms.com

TEAM FOR YOU

PROJECT MANAGEMENT SERVICES &TESTING DIVISION

NABL Accredited As Per ISO/IEC : 17025:2017

ISO 9001 : 2015 Certified Company

Test Report
Concrete Compresive strength

Project Name	Repairs to Existing Samudhaya Bhavan at Basavalingappa Nagar in Ward No.03'
Client	Assistant Executive Engineer-Yelahanka Sub Division
Job No	TFU/BBMP/QC/EE/YLK/2024-25/QR-02
Sample condtion	Satisfactory
Contractor	Sri Prashanth M (Maradis Enterprises)
Test Method	IS : 4031 (part 6)-1988 & Specification for Road & Bridge Works, MORT&H, Rev. V.
Location	laboratory (sample Collected @ Samudhaya Bhavan at Basavalingappa Nagar)
Material	Concrete (M10) (1:3:6)
Sample No	3
Cube Casted Date	23-May-2025
Tested Date	20-Jun-2025

Cube	Concrete Grade	Age at Test (Days)	Weight (kg)	Dimension (LxWxH)	Density (kg/m^3)	Max. Load (KN)	Area (m^2)	Compressive Strength (N/mm^2)	Avg. Sample Strength
1	10	28	6.15	150*150*150	1822.22	253	0.0225	11.24	11.47
2	10	28	6.21	150*150*150	1840.00	258	0.0225	11.47	
3	10	28	6.27	150*150*150	1857.78	263	0.0225	11.69	

Results: 28-days Compressive strength of Concrete is 11.47 N/mm2

For Team For You

Authorised Signature

ಸಹಾಯಕ ಕಾರ್ಯಪಾಲಕ ಅಭಿಯಂತರರು
ಯಲಹಂಕ ಉಪನಗರ ಉಪವಿಭಾಗ
ಬ.ಜ.ಎಂ.ಪ. ಬೆಂಗಳೂರು-64

102, 3rd Cross, 1st Main, Kottigepalya, Magadi Main Road, Bangalore - 560 091.

+91 7829676869 +91 9916889374 team4upms@gmail.com,info@team4upms.com

M/s Team for You

Project Management Services

Summary of Frequencies of Field Tests and Lab Tests Conducted

Name of the work: Repairs to Existing Samudhaya Bhavan at Basavalingappa Nagar in Ward No.03'

Job No: TFU/BBMP/QC/EE/YLK/2024-25/QR-02

Contractor Sri Prashanth M (Maradis Enterprises)

Item No	Particulars of the Tests	Concrete (M25) For Roof Beam			
		Quantity Cum	Frequency of Tests	Tests Required	Tests Carried Out
11	**Concrete M25 for Roof Beam**	6.55	1 to 5cum=1 sample 6 to 15 cum=2 sample 16 to 30cum=3 smaple 31 to 50cum= 4 sample 51cum and above= one additonal sample for every additional 50 cum or part therof	2	2
	Compressive strength test				
	7 days				
	28 days				

Note: Frequency of tests as per Specifications MORTH&, V Revision, Section 900.

CONSULTANT

CONTRACTOR

ASSISTANT ENGINEER

ASSISTANT EXECUTIVE ENGINEER

Test Report
Concrete Compresive strength

Project Name	Repairs to Existing Samudhaya Bhavan at Basavalingappa Nagar in Ward No.03'
Client	Assistant Executive Engineer-Yelahanka Sub Division
Job No	TFU/BBMP/QC/EE/YLK/2024-25/QR-02
Sample condtion	Satisfactory
Contractor	Sri Prashanth M (Maradis Enterprises)
Test Method	IS : 4031 (part 6)-1988 & Specification for Road & Bridge Works, MORT&H, Rev. V.
Location	laboratory (sample Collected @ Samudhaya Bhavan at Basavalingappa Nagar)
Material	Concrete (M25) For Roof Beam
Sample No	1
Cube Casted Date	2-Apr-2025
Tested Date	9-Apr-2025

Cube	Concrete Grade	Age at Test (Days)	Weight (kg)	Dimension (LxWxH)	Density (kg/m^3)	Max. Load (KN)	Area (m^2)	Compressive Strength (N/mm^2)	Avg. Sample Strength
1	25	7	7.63	150*150*150	2260.74	451	0.0225	20.04	19.61
2	25	7	7.52	150*150*150	2228.15	438	0.0225	19.47	
3	25	7	7.46	150*150*150	2210.37	435	0.0225	19.33	

Results: 7-days Compressive strength of Concrete is 19.61 N/mm2

For Team For You.

Authorised Signature

ಸಹಾಯಕ ಕಾರ್ಯಪಾಲಕ ಅಭಿಯಂತರರು
ಯಲಹಂಕ ಉಪನಗರ ಉಪವಿಭಾಗ
ಬ.ಬ.ಎಂ.ಪಿ. ಬೆಂಗಳೂರು-64

TEAM FOR YOU

PROJECT MANAGEMENT SERVICES &TESTING DIVISION

NABL Accredited As Per ISO/IEC : 17025:2017

ISO 9001 : 2015 Certified Company

Test Report
Concrete Compresive strength

Project Name	Repairs to Existing Samudhaya Bhavan at Basavalingappa Nagar in Ward No.03'
Client	Assistant Executive Engineer-Yelahanka Sub Division
Job No	TFU/BBMP/QC/EE/YLK/2024-25/QR-02
Sample condtion	Satisfactory
Contractor	Sri Prashanth M (Maradis Enterprises)
Test Method	IS : 4031 (part 6)-1988 & Specification for Road & Bridge Works, MORT&H, Rev. V.
Location	laboratory (sample Collected @ Samudhaya Bhavan at Basavalingappa Nagar)
Material	Concrete (M25) For Roof Beam
Sample No	2
Cube Casted Date	2-Apr-2025
Tested Date	9-Apr-2025

Cube	Concrete Grade	Age at Test (Days)	Weight (kg)	Dimension (LxWxH)	Density (kg/m^3)	Max. Load (KN)	Area (m^2)	Compressive Strength (N/mm^2)	Avg. Sample Strength
1	25	7	7.52	150*150*150	2228.15	433	0.0225	19.24	19.63
2	25	7	7.63	150*150*150	2260.74	443	0.0225	19.69	
3	25	7	7.70	150*150*150	2281.48	449	0.0225	19.96	

Results: 7-days Compressive strength of Concrete is 19.63 N/mm2

For Team For You

Authorised Signature

ಸಹಾಯಕ ಕಾರ್ಯಪಾಲಕ ಅಭಿಯಂತರರು
ಯಲಹಂಕ ಉಪನಗರ ಉಪವಿಭಾಗ
ಬಿ.ಬಿ.ಎಂ.ಪಿ. ಬೆಂಗಳೂರು-64

102, 3rd Cross, 1st Main, Kottigepalya, Magadi Main Road, Bangalore - 560 091.

+91 7829676869 +91 9916889374 team4upms@gmail.com,info@team4upms.com

TEAM FOR YOU

PROJECT MANAGEMENT SERVICES &TESTING DIVISION

NABL Accredited As Per ISO/IEC : 17025:2017

ISO 9001 : 2015 Certified Company

Test Report
Concrete Compresive strength

Project Name	Repairs to Existing Samudhaya Bhavan at Basavalingappa Nagar in Ward No.03'
Client	Assistant Executive Engineer-Yelahanka Sub Division
Job No	TFU/BBMP/QC/EE/YLK/2024-25/QR-02
Sample condtion	Satisfactory
Contractor	Sri Prashanth M (Maradis Enterprises)
Test Method	IS: 516 - 1959,2021 P1, Sec1, Methods of Tests for Strength of Concrete Cl.3
Location	laboratory (sample Collected @ Samudhaya Bhavan at Basavalingappa Nagar)
Material	Concrete M25 for Roof Beam
Sample No	1
Cube Casted Date	2-Apr-2025
Tested Date	7-May-2025

Cube	Concrete Grade	Age at Test (Days)	Weight (kg)	Dimension (LxWxH)	Density (kg/m^3)	Max. Load (KN)	Area (m^2)	Compressive Strength (N/mm^2)	Avg. Sample Strength
1	25	28	7.48	150*150*150	2216.30	618	0.0225	27.47	27.41
2	25	28	7.52	150*150*150	2228.15	622	0.0225	27.64	
3	25	28	7.56	150*150*150	2240.00	610	0.0225	27.11	

Results: 28-days Compressive strength of Concrete is 27.41 N/mm2

For Team For You

Authorised Signature

ಸಹಾಯಕ ಕಾರ್ಯಪಾಲಕ ಅಭಿಯಂತರರು
ಯಲಹಂಕ ಉಪನಗರ ಉಪವಿಭಾಗ
ಬಿ.ಬಿ.ಎಂ.ಪಿ. ಬೆಂಗಳೂರು-64

102, 3rd Cross, 1st Main, Kottigepalya, Magadi Main Road, Bangalore - 560 091.

+91 7829676869 +91 9916889374 team4upms@gmail.com,info@team4upms.com

TEAM FOR YOU

PROJECT MANAGEMENT SERVICES &TESTING DIVISION

NABL Accredited As Per ISO/IEC : 17025:2017

ISO 9001 : 2015 Certified Company

Test Report
Concrete Compresive strength

Project Name	Repairs to Existing Samudhaya Bhavan at Basavalingappa Nagar in Ward No.03'
Client	Assistant Executive Engineer-Yelahanka Sub Division
Job No	TFU/BBMP/QC/EE/YLK/2024-25/QR-02
Sample condtion	Satisfactory
Contractor	Sri Prashanth M (Maradis Enterprises)
Test Method	IS: 516 - 1959,2021 P1, Sec1, Methods of Tests for Strength of Concrete Cl.3
Location	laboratory (sample Collected @ Samudhaya Bhavan at Basavalingappa Nagar)
Material	Concrete M25 for Roof Beam
Sample No	2
Cube Casted Date	2-Apr-2025
Tested Date	7-May-2025

Cube	Concrete Grade	Age at Test (Days)	Weight (kg)	Dimension (LxWxH)	Density (kg/m^3)	Max. Load (KN)	Area (m^2)	Compressive Strength (N/mm^2)	Avg. Sample Strength
1	25	28	7.64	150*150*150	2263.70	620	0.0225	27.56	27.47
2	25	28	7.48	150*150*150	2216.30	624	0.0225	27.73	
3	25	28	7.42	150*150*150	2198.52	610	0.0225	27.11	

Results: 28-days Compressive strength of Concrete is 27.47 N/mm2

For Team For You

Authorised Signature

ಸಹಾಯಕ ಕಾರ್ಯಪಾಲಕ ಅಭಿಯಂತರರು
ಯಲಹಂಕ ಉಪನಗರ ಉಪವಿಭಾಗ
ಬಿ.ಬಿ.ಎಂ.ಪಿ. ಬೆಂಗಳೂರು-64

102, 3rd Cross, 1st Main, Kottigepalya, Magadi Main Road, Bangalore - 560 091.

+91 7829676869 +91 9916889374 team4upms@gmail.com,info@team4upms.com

For Team For You

Project Management & Consultancy Services

Summary of Frequencies of Field Tests and Lab Tests Conducted

Name of the work: **Repairs to Existing Samudhaya Bhavan at Basavalingappa Nagar in Ward No.03'**

Job No: **TFU/BBMP/QC/EE/YLK/2024-25/QR-02**

Contractor **Sri Prashanth M (Maradis Enterprises)**

Item No	Particulars of the Tests	Concrete (M25) for Slab			
		Quantity Cum	Frequency of Tests	Tests Required	Tests Carried Out
13	**Concrete (M25) for Slab**	14.36	1 to 5cum=1 sample 6 to 15 cum=2 sample 16 to 30cum=3 smaple 31 to 50cum= 4 sample 51cum and above= one additonal sample for every additional 50 cum or part therof	2	2
	Compressive strength test				
	7-days				
	28-days				

Note: Frequency of tests as per Specifications MORT&H, V Revision, Section 900.

CONSULTANT

CONTRACTOR

ASSISTANT ENGINEER

ASSISTANT EXECUTIVE ENGINEER

EXECUTIVE ENGINEER

TEAM FOR YOU

PROJECT MANAGEMENT SERVICES &TESTING DIVISION

NABL Accredited As Per ISO/IEC : 17025:2017

ISO 9001 : 2015 Certified Company

Test Report
Concrete Compresive strength

Project Name	Repairs to Existing Samudhaya Bhavan at Basavalingappa Nagar in Ward No.03'
Client	Assistant Executive Engineer-Yelahanka Sub Division
Job No	TFU/BBMP/QC/EE/YLK/2024-25/QR-02
Sample condtion	Satisfactory
Contractor	Sri Prashanth M (Maradis Enterprises)
Test Method	IS : 4031 (part 6)-1988 & Specification for Road & Bridge Works, MORT&H, Rev. V.
Location	laboratory (sample Collected @ Samudhaya Bhavan at Basavalingappa Nagar)
Material	Concrete (M25) for Slab
Sample No	1
Cube Casted Date	16-Apr-2025
Tested Date	23-Apr-2025

Cube	Concrete Grade	Age at Test (Days)	Weight (kg)	Dimension (LxWxH)	Density (kg/m^3)	Max. Load (KN)	Area (m^2)	Compressive Strength (N/mm^2)	Avg. Sample Strength
1	25	7	7.53	150*150*150	2231.11	447	0.0225	19.87	19.44
2	25	7	7.42	150*150*150	2198.52	434	0.0225	19.29	
3	25	7	7.36	150*150*150	2180.74	431	0.0225	19.16	

Results: 7-days Compressive strength of Concrete is 19.44 N/mm2

For Team For You

Authorised Signature

ಸಹಾಯಕ ಕಾರ್ಯನಿರ್ವಾಹಕ ಅಭಿಯಂತರರು
ಯಲಹಂಕ ಉಪನಗರ ಉಪವಿಭಾಗ
ಬಿ ಬಿ ಎಂ.ಪಿ. ಬೆಂಗಳೂರು-64

102, 3rd Cross, 1st Main, Kottigepalya, Magadi Main Road, Bangalore - 560 091.

+91 7829676869 +91 9916889374 team4upms@gmail.com,info@team4upms.com

TEAM FOR YOU
PROJECT MANAGEMENT SERVICES &TESTING DIVISION
NABL Accredited As Per ISO/IEC : 17025:2017
ISO 9001 : 2015 Certified Company

Test Report
Concrete Compresive strength

Project Name	Repairs to Existing Samudhaya Bhavan at Basavalingappa Nagar in Ward No.03'
Client	Assistant Executive Engineer-Yelahanka Sub Division
Job No	TFU/BBMP/QC/EE/YLK/2024-25/QR-02
Sample condtion	Satisfactory
Contractor	Sri Prashanth M (Maradis Enterprises)
Test Method	IS : 4031 (part 6)-1988 & Specification for Road & Bridge Works, MORT&H, Rev. V.
Location	laboratory (sample Collected @ Samudhaya Bhavan at Basavalingappa Nagar)
Material	Concrete (M25) for Slab
Sample No	2
Cube Casted Date	16-Apr-2025
Tested Date	23-Apr-2025

Cube	Concrete Grade	Age at Test (Days)	Weight (kg)	Dimension (LxWxH)	Density (kg/m^3)	Max. Load (KN)	Area (m^2)	Compressive Strength (N/mm^2)	Avg. Sample Strength
1	25	7	7.42	150*150*150	2198.52	429	0.0225	19.07	19.45
2	25	7	7.53	150*150*150	2231.11	439	0.0225	19.51	
3	25	7	7.60	150*150*150	2251.85	445	0.0225	19.78	

Results: 7-days Compressive strength of Concrete is 19.45 N/mm2

ಸಹಾಯಕ ಕಾರ್ಯನಿರ್ವಾಹಕ ಅಭಿಯಂತರರು
ಯಲಹಂಕ ಉಪನಗರ ಉಪವಿಭಾಗ
ಬಿ.ಬಿ.ಎಂ.ಪಿ. ಬೆಂಗಳೂರು-64

For Team For You

Authorised Signature

102, 3rd Cross, 1st Main, Kottigepalya, Magadi Main Road, Bangalore - 560 091.
+91 7829676869 +91 9916889374 team4upms@gmail.com,info@team4upms.com

TEAM FOR YOU
PROJECT MANAGEMENT SERVICES &TESTING DIVISION
NABL Accredited As Per ISO/IEC : 17025:2017
ISO 9001 : 2015 Certified Company

Test Report
Concrete Compresive strength

Project Name	Repairs to Existing Samudhaya Bhavan at Basavalingappa Nagar in Ward No.03'
Client	Assistant Executive Engineer-Yelahanka Sub Division
Job No	TFU/BBMP/QC/EE/YLK/2024-25/QR-02
Sample condtion	Satisfactory
Contractor	Sri Prashanth M (Maradis Enterprises)
Test Method	IS : 4031 (part 6)-1988 & Specification for Road & Bridge Works, MORT&H, Rev. V.
Location	laboratory (sample Collected @ Samudhaya Bhavan at Basavalingappa Nagar)
Material	Concrete (M25) for Slab
Sample No	1
Cube Casted Date	16-Apr-2025
Tested Date	14-May-2025

Cube	Concrete Grade	Age at Test (Days)	Weight (kg)	Dimension (LxWxH)	Density (kg/m^3)	Max. Load (KN)	Area (m^2)	Compressive Strength (N/mm^2)	Avg. Sample Strength
1	25	28	7.6	150*150*150	2251.85	606	0.0225	26.93	27.17
2	25	28	7.74	150*150*150	2293.33	612	0.0225	27.20	
3	25	28	7.84	150*150*150	2322.96	616	0.0225	27.38	

Results: 28-days Compressive strength of Concrete is 27.17 N/mm2

For Team For You

Authorised Signature

ಸಹಾಯಕ ಕಾರ್ಯನಿರ್ವಾಹಕ ಅಭಿಯಂತರರು
ಯಲಹಂಕ ಉಪನಗರ ಉಪವಿಭಾಗ
ಬ.ಬ.ಎಂ.ಪಿ. ಬೆಂಗಳೂರು-64

102, 3rd Cross, 1st Main, Kottigepalya, Magadi Main Road, Bangalore - 560 091.
+91 7829676869 +91 9916889374 team4upms@gmail.com,info@team4upms.com

TEAM FOR YOU
PROJECT MANAGEMENT SERVICES &TESTING DIVISION
NABL Accredited As Per ISO/IEC : 17025:2017
ISO 9001 : 2015 Certified Company

Test Report
Concrete Compresive strength

Project Name	Repairs to Existing Samudhaya Bhavan at Basavalingappa Nagar in Ward No.03'
Client	Assistant Executive Engineer-Yelahanka Sub Division
Job No	TFU/BBMP/QC/EE/YLK/2024-25/QR-02
Sample condtion	Satisfactory
Contractor	Sri Prashanth M (Maradis Enterprises)
Test Method	IS : 4031 (part 6)-1988 & Specification for Road & Bridge Works, MORT&H, Rev. V.
Location	laboratory (sample Collected @ Samudhaya Bhavan at Basavalingappa Nagar)
Material	Concrete (M25) for Slab
Sample No	2
Cube Casted Date	16-Apr-2025
Tested Date	14-May-2025

Cube	Concrete Grade	Age at Test (Days)	Weight (kg)	Dimension (LxWxH)	Density (kg/m^3)	Max. Load (KN)	Area (m^2)	Compressive Strength (N/mm^2)	Avg. Sample Strength
1	25	28	7.54	150*150*150	2234.07	593	0.0225	26.36	26.58
2	25	28	7.61	150*150*150	2254.81	598	0.0225	26.58	
3	25	28	7.73	150*150*150	2290.37	603	0.0225	26.80	

Results: 28-days Compressive strength of Concrete is 26.58 N/mm2

For Team For You

Authorised Signature

ಸಹಾಯಕ ಕಾರ್ಯಪಾಲಕ ಅಭಿಯಂತರರು
ಯಲಹಂಕ ಉಪನಗರ ಉಪವಿಭಾಗ
ಬಿ.ಬಿ.ಎಂ.ಪಿ. ಬೆಂಗಳೂರು-64

102, 3rd Cross, 1st Main, Kottigepalya, Magadi Main Road, Bangalore - 560 091.
+91 7829676869 +91 9916889374 team4upms@gmail.com,info@team4upms.com

M/s Team For You

Project Management Services

Summary of Frequencies of Field Tests and Lab Tests Conducted

Name of the work: Repairs to Existing Samudhaya Bhavan at Basavalingappa Nagar in Ward No.03'

Job No: TFU/BBMP/QC/EE/YLK/2024-25/QR-02

Contractor Sri Prashanth M (Maradis Enterprises)

SL No	Particulars of the Tests	Frequency of Tests	Tests Required	Tests Carried Out
1	Steel	one test	one test	one test

CONSULTANT

CONTRACTOR

ASSISTANT ENGINEER

ASSISTANT EXECUTIVE ENGINEER

TEAM FOR YOU
PROJECT MANAGEMENT SERVICES &TESTING DIVISION
NABL Accredited As Per ISO/IEC : 17025:2017
ISO 9001 : 2015 Certified Company

Test Result for Steel

Project Name	Repairs to Existing Samudhaya Bhavan at Basavalingappa Nagar in Ward No.03'
Client	Assistant Executive Engineer-Yelahanka Sub Division
Job No	TFU/BBMP/QC/EE/YLK/2024-25/QR-02
Sample Condition	Satisfactory
Contractor	Sri Prashanth M (Maradis Enterprises)
Location	Sample Collected @ Stack area (Samudhaya Bhavan at Basavalingappa Nagar)
Test Method	IS 1786-2008,
Material	Steel
Sample No	1
Date	1-Apr-2025

Sl. No.	Dia in mm	Weight in Kg/mtr	Average Weight Kg/mtr	Ultimate Load in KN	Ultimate Tensile stress in N/mm^2	Average Ultimate Tensile Stress N/mm^2	Elongation in %	Rebend Test
1	8	0.397	0.40	27.70	551.35	552.3	20	OK
	8	0.394		27.80	553.34			
2	10	0.617	0.62	46.60	593.63	592.4	20	OK
	10	0.614		46.40	591.08			
4	16	1.6	1.60	121.50	604.60	605.6	20	OK
	16	1.598		121.90	606.59			
5	20	2.5	2.49	193.50	608.00	609.0	20	OK
	20	2.48		194.20	610.00			
6	25	3.88	3.89	301.50	614.52	614.9	20	OK
	25	3.9		301.90	615.34			

M/s Team For You

Authorised Signature

ಸಹಾಯಕ ಕಾರ್ಯನಿರ್ವಾಹಕ ಅಭಿಯಂತರರು
ಯಲಹಂಕ ಉಪನಗರ ಉಪವಿಭಾಗ
ಬಿ.ಬಿ.ಎಂ.ಪಿ. ಬೆಂಗಳೂರು-64

102, 3rd Cross, 1st Main, Kottigepalya, Magadi Main Road, Bangalore - 560 091.
+91 7829676869 +91 9916889374 team4upms@gmail.com,info@team4upms.com

For Team For You

Project Management Services

Summary of Frequencies of Field Tests and Lab Tests Conducted

Name of the work: **Repairs to Existing Samudhaya Bhavan at Basavalingappa Nagar in Ward No.03'**

Job No: **TFU/BBMP/QC/EE/YLK/2024-25/QR-02**

Contractor **Sri Prashanth M (Maradis Enterprises)**

Item No	Particulars of the Tests	Concrete (Solid Block)		
		Frequency of Tests	Tests Required	Tests Carried Out
1	**Concrete**	ONE TEST	ONE TEST	ONE TEST
	Compressive strength test			

CONSULTANT

CONTRACTOR

ASSISTANT ENGINEER

ASSISTANT EXECUTIVE ENGINEER
ಸಹಾಯಕ ಕಾರ್ಯನಿರ್ವಾಹಕ ಅಭಿಯಂತರರು
ಯಲಹಂಕ ಉಪನಗರ ಉಪವಿಭಾಗ
ಬಿ.ಬಿ.ಎಂ.ಪಿ. ಬೆಂಗಳೂರು-64

TEAM FOR YOU
PROJECT MANAGEMENT SERVICES &TESTING DIVISION
NABL Accredited As Per ISO/IEC : 17025:2017
ISO 9001 : 2015 Certified Company

Test Report - Soild Block

Project Name	Repairs to Existing Samudhaya Bhavan at Basavalingappa Nagar in Ward No.03'
Client	Assistant Executive Engineer-Yelahanka Sub Division
Job No	TFU/BBMP/QC/EE/YLK/2024-25/QR-02
Mix Type	Concrete (Solid Block)
Contractor	Sri Prashanth M (Maradis Enterprises)
Test Method	IS : 2185 (Part 1)-2005
Location	Sample Collected @ Samudhaya Bhavan at Basavalingappa Nagar
Material	Soild block (400X150X200mm)
Sample No	1
Date	7-May-2025

SL.NO	Failure Load in KN	Characteristic Compressive Strength, fck , in, N/Sq.mm	AVG Characteristic Compressive Strength, fck , in, N/Sq.mm	Minimum Average Compressive Strength of Units, N/mm2
1	298	4.97	4.98	4.00
2	302	5.03		
3	297	4.95		

For Team For You

Authorised Signature

ಸಹಾಯಕ ಕಾರ್ಯ ಪಾಲಕ ಅಭಿಯಂತರರು
ಯಲಹಂಕ ಉಪನಗರ ಉಪವಿಭಾಗ
ಬಿ.ಬಿ.ಎಂ.ಪಿ. ಬೆಂಗಳೂರು-64

102, 3rd Cross, 1st Main, Kottigepalya, Magadi Main Road, Bangalore - 560 091.
+91 7829676869 +91 9916889374 team4upms@gmail.com,info@team4upms.com

M/s Team For You

Project Management Services

Summary of Frequencies of Field Tests and Lab Tests Conducted

Name of the work: Repairs to Existing Samudhaya Bhavan at Basavalingappa Nagar in Ward No.03'

Job No: TFU/BBMP/QC/EE/YLK/2024-25/QR-02

Contractor Sri Prashanth M (Maradis Enterprises)

Item. No	Particulars of the Tests	Quantity in Sqm	Frequency of Tests	Tests Required	Tests Carried Out
14	**PAVER BLOCKS**	180.69	1 sample per source	1	1
	Compressive strength test				

Note: Frequency of tests as per Specifications MORT&H, V Revision, Section 900.

CONSULTANT

CONTRACTOR

ASSISTANT ENGINEER

ASSISTANT EXECUTIVE ENGINEER

EXECUTIVE ENGINEER

TEAM FOR YOU

PROJECT MANAGEMENT SERVICES &TESTING DIVISION

NABL Accredited As Per ISO/IEC : 17025:2017
ISO 9001 : 2015 Certified Company

Test Report

Interlock pavers

Project Name	Repairs to Existing Samudhaya Bhavan at Basavalingappa Nagar in Ward No.03'
Client	Assistant Executive Engineer-Yelahanka Sub Division
Job No	TFU/BBMP/QC/EE/YLK/2024-25/QR-02
Contractor	Sri Prashanth M (Maradis Enterprises)
Location	laboratory (sample Collected @ Samudhaya Bhavan at Basavalingappa Nagar
Material	Pavers
Sample No	1
Date	12-Jun-2025

SL.NO	DETAILS	Thickess of Paver (MM)	Area of Single Paver Block (MM)	Failure load (KN)	COMPRESSIVE STRENGTH, N/mm2	AVG COMPRESSIVE STRENGTH, N/mm2
1	Paver Block	60	25550	832.10	32.57	32.30
2	Paver Block	60	25550	823.20	32.22	
3	Paver Block	60	25550	817.40	31.99	
4	Paver Block	60	25550	828.60	32.43	

Results: Compressive strength of Interlock pavers is **32.30 N/mm²**

M/s Team For You

Authorised Signature

ಸಹಾಯಕ ಕಾರ್ಯನಿರ್ವಾಹಕ ಅಭಿಯಂತರರು
ಯಲಹಂಕ ಉಪನಗರ ಉಪವಿಭಾಗ
ಬಿ.ಬಿ.ಎಂ.ಪಿ. ಬೆಂಗಳೂರು-64

102, 3rd Cross, 1st Main, Kottigepalya, Magadi Main Road, Bangalore - 560 091.
+91 7829676869 info@team4upms.com

Team For You

Engineers & Consultants

Summary of Frequencies of Field Tests and Lab Tests Conducted

Name of the work: **Repairs to Existing Samudhaya Bhavan at Basavalingappa Nagar in Ward No.03'**

Job No: **TFU/BBMP/QC/EE/YLK/2024-25/QR-02**

Contractor **Sri Prashanth M (Maradis Enterprises)**

Sl no	Particulars of the Tests	Frequency of Tests	Tests Required	Tests Carried Out
1	PVC pipe 20mm Dia	One test	One test	One test
2	PVC pipe 25mm Dia	One test	One test	One test
3	PVC pipe 32mm Dia	One test	One test	One test

CONSULTANT

CONTRACTOR

ASSISTANT ENGINEER

ASSISTANT EXECUTIVE ENGINEER

TEAM FOR YOU
PROJECT MANAGEMENT SERVICES &TESTING DIVISION
NABL Accredited As Per ISO/IEC : 17025:2017
ISO 9001 : 2015 Certified Company

Test Report
PVC PIPE

Project Name	Repairs to Existing Samudhaya Bhavan at Basavalingappa Nagar in Ward No.03'
Client	Assistant Executive Engineer-Yelahanka Sub Division
Job No	TFU/BBMP/QC/EE/YLK/2024-25/QR-02
Contractor	Sri Prashanth M (Maradis Enterprises)
Test Method	IS 4985:2000
Location	Sample Collected @ Samudhayabhavan at Basavalingappa Nagar
Material	PVC pipe 20mm Dia
Sample No	1
Date	8-Jul-2025

SL.NO	Test	Test Result	Requirements as per IS 4985:2000
1	Nominal Outer Diameter	20mm	20mm
2	Mean Outside Diameter	20.1mm	Min 20.0mm Max 20.3mm
3	Outside Diameter at Any Point (mm)	20.2mm	Min 19.5mm Max 20.5mm

For Team For You

Authorised Signature

ಸಹಾಯಕ ಕಾರ್ಯನಿರ್ವಾಹಕ ಅಭಿಯಂತರರು
ಯಲಹಂಕ ಉಪನಗರ ಉಪವಿಭಾಗ
ಬಿ.ಬಿ.ಎಂ.ಪಿ. ಬೆಂಗಳೂರು-64

102, 3rd Cross, 1st Main, Kottigepalya, Magadi Main Road, Bangalore - 560 091.
+91 7829676869 +91 9916889374 team4upms@gmail.com,info@team4upms.com

Test Report
PVC PIPE

Project Name	Repairs to Existing Samudhaya Bhavan at Basavalingappa Nagar in Ward No.03'
Client	Assistant Executive Engineer-Yelahanka Sub Division
Job No	TFU/BBMP/QC/EE/YLK/2024-25/QR-02
Contractor	Sri Prashanth M (Maradis Enterprises)
Test Method	IS 4985:2000
Location	Sample Collected @ Samudhayabhavan at Basavalingappa Nagar
Material	PVC pipe 25mm Dia
Sample No	2
Date	8-Jul-2025

SL.NO	Test	Test Result	Requirements as per IS 4985:2000
1	Nominal Outer Diameter	25mm	25mm
2	Mean Outside Diameter	25.0mm	Min 25.0mm Max 25.0mm
3	Outside Diameter at Any Point (mm)	25.2mm	Min 24.5mm Max 25.5mm

For Team For You

Authorised Signature

Test Report
PVC PIPE

Project Name	Repairs to Existing Samudhaya Bhavan at Basavalingappa Nagar in Ward No.03'
Client	Assistant Executive Engineer-Yelahanka Sub Division
Job No	TFU/BBMP/QC/EE/YLK/2024-25/QR-02
Contractor	Sri Prashanth M (Maradis Enterprises)
Test Method	IS 4985:2000
Location	Sample Collected @ Samudhayabhavan at Basavalingappa Nagar
Material	PVC pipe 32mm Dia
Sample No	3
Date	8-Jul-2025

SL.NO	Test	Test Result	Requirements as per IS 4985:2000
1	Nominal Outer Diameter	32mm	32mm
2	Mean Outside Diameter	31.9mm	Min 31.8mm Max 32.0mm
3	Outside Diameter at Any Point (mm)	32.0 mm	Min 31.7mm Max 32.1mm

For Team For You

Authorised Signature

ಸಹಾಯಕ ಕಾರ್ಯಪಾಲಕ ಅಭಿಯಂತರರು
ಯಲಹಂಕ ಉಪನಗರ ಉಪವಿಭಾಗ
ಬ.ಜ.ಎಂ.ಪ. ಬೆಂಗಳೂರು-64